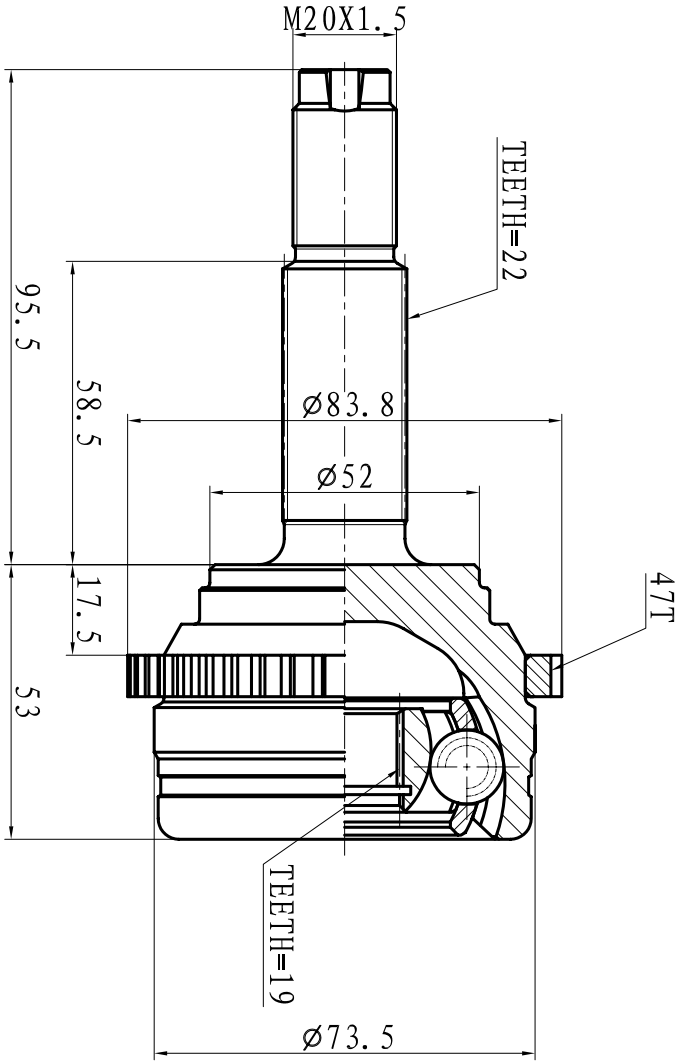
M20X1.5
95.5
58.5
17.5
53
TEETH=22
Ø83.8
Ø52
47T
TEETH=19
Ø73.5