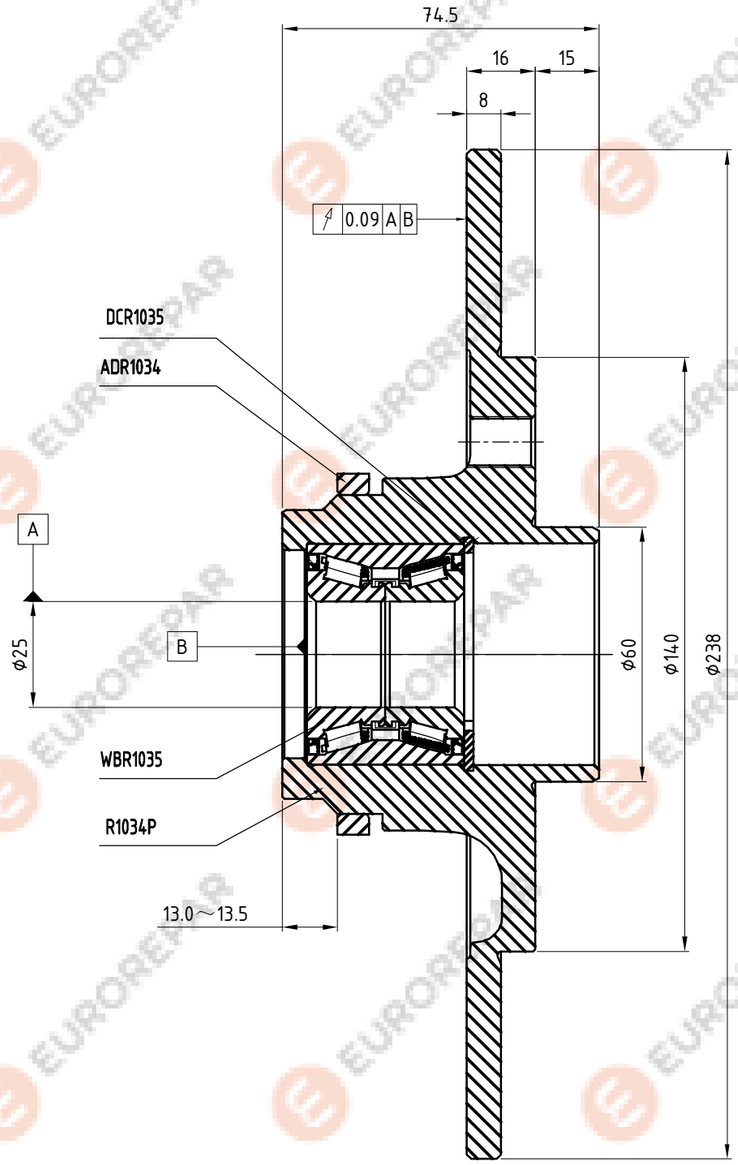

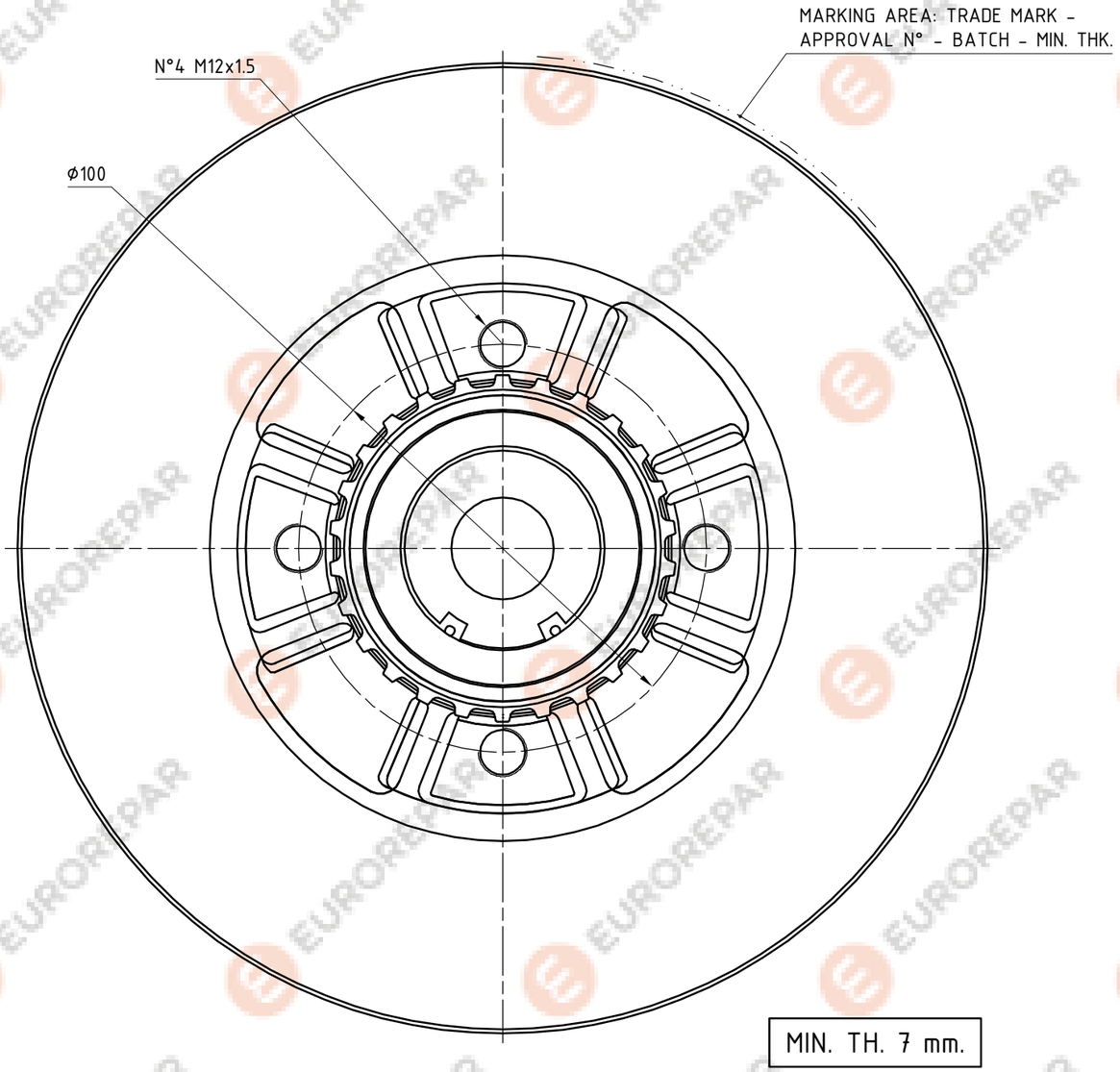

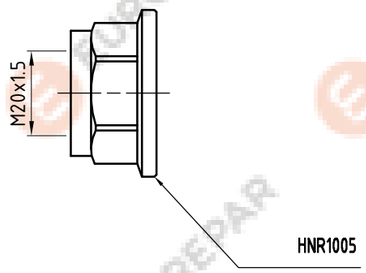

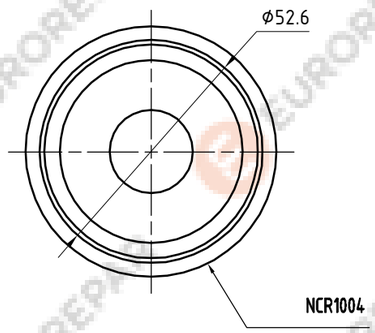

CODE	NAME	MATERIAL	PCS	NOTE
NCR1004	DUST COVER		1	
HNR1005	HUB NUT		1	
ADR1034	ABS TONE RING		1	
DCR1035	SEEGER		1	
WBR1035	BEARING		1	
R1034P	DISK		1	

EUROREPAR