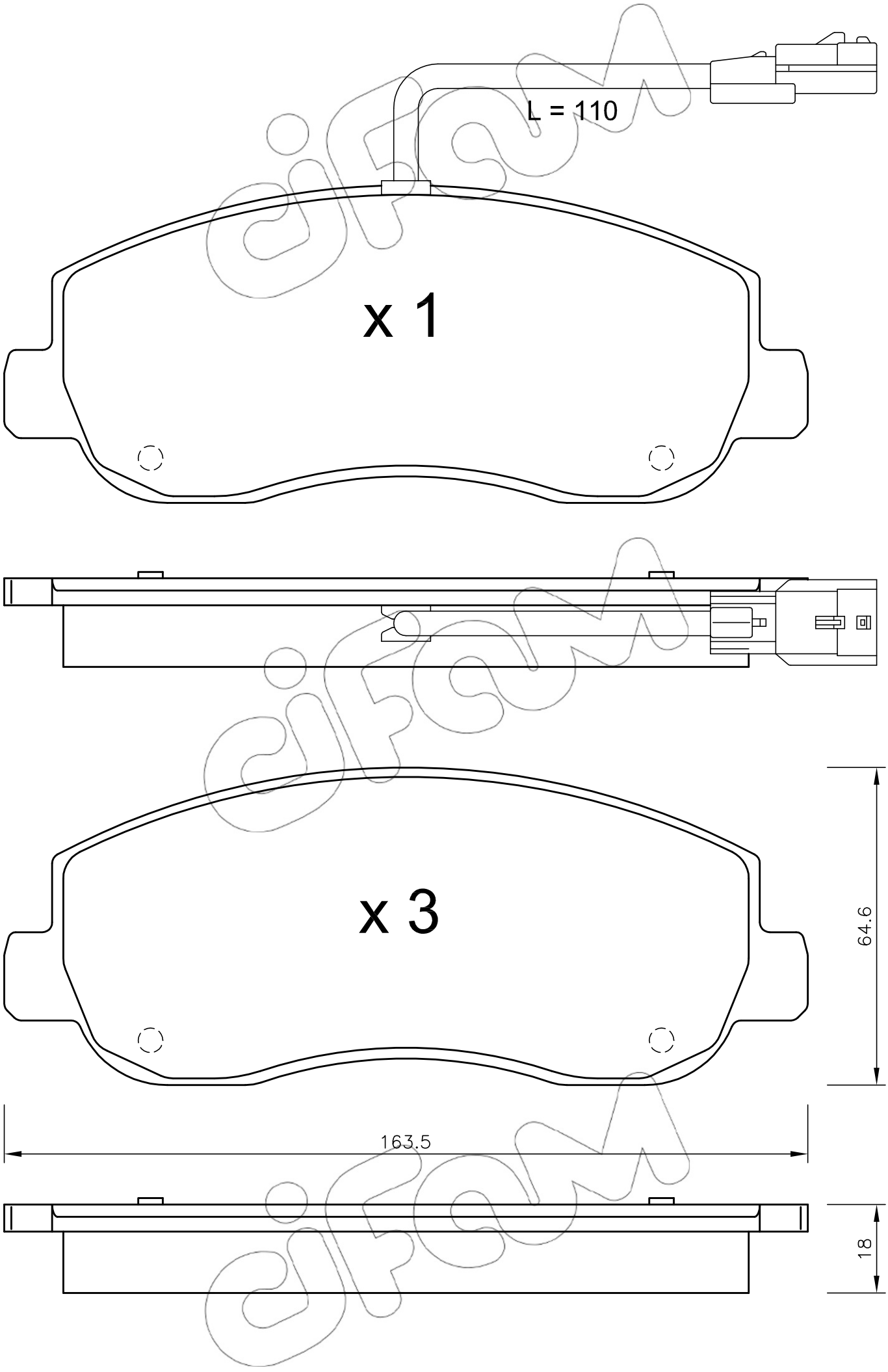
L = 110
x 1
x 3
64.6
163.5
18