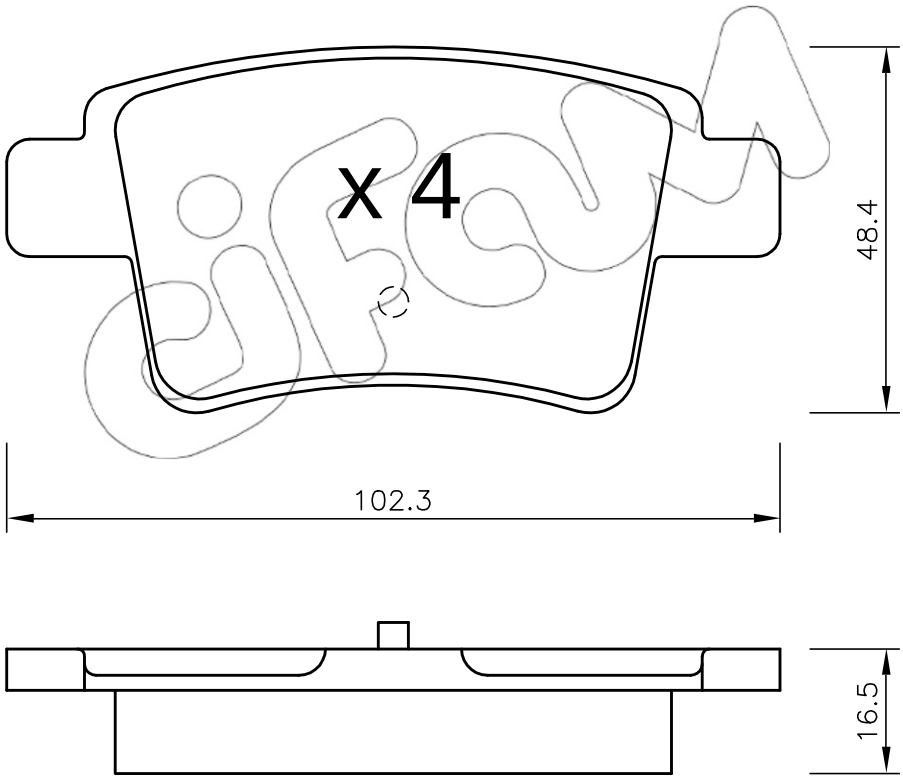
x 4
48.4
102.3
16.5