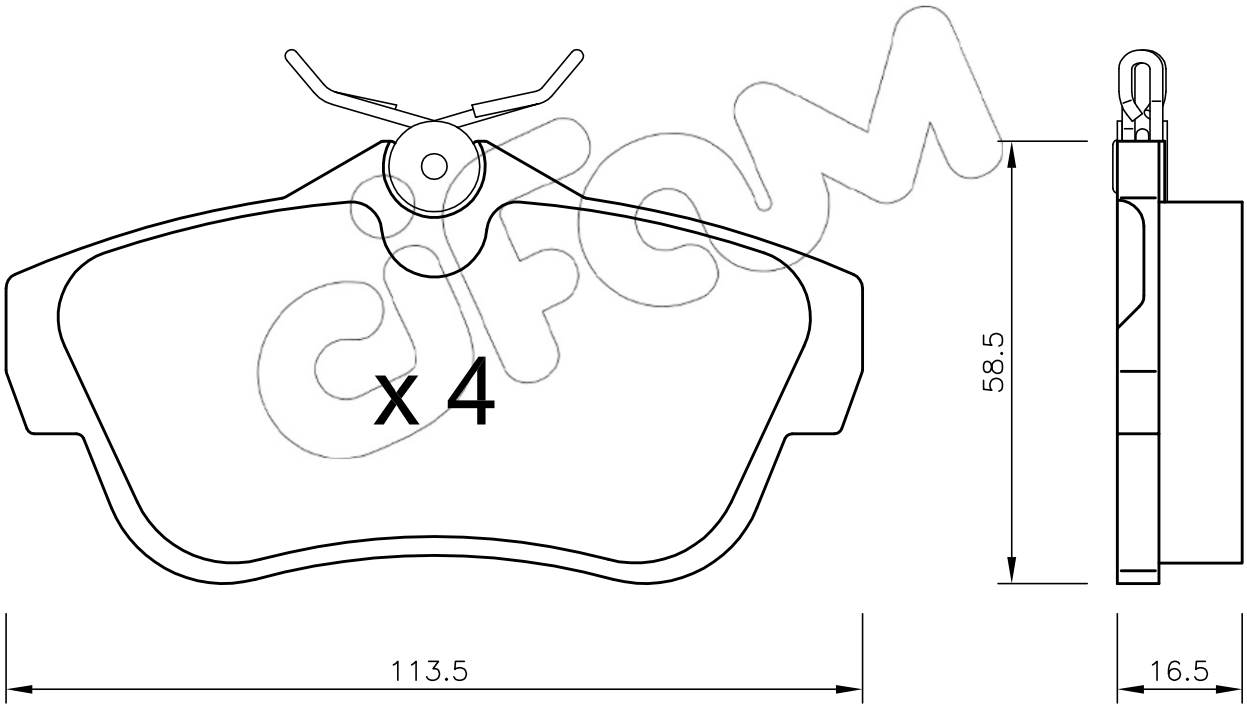
x 4
58.5
113.5
16.5