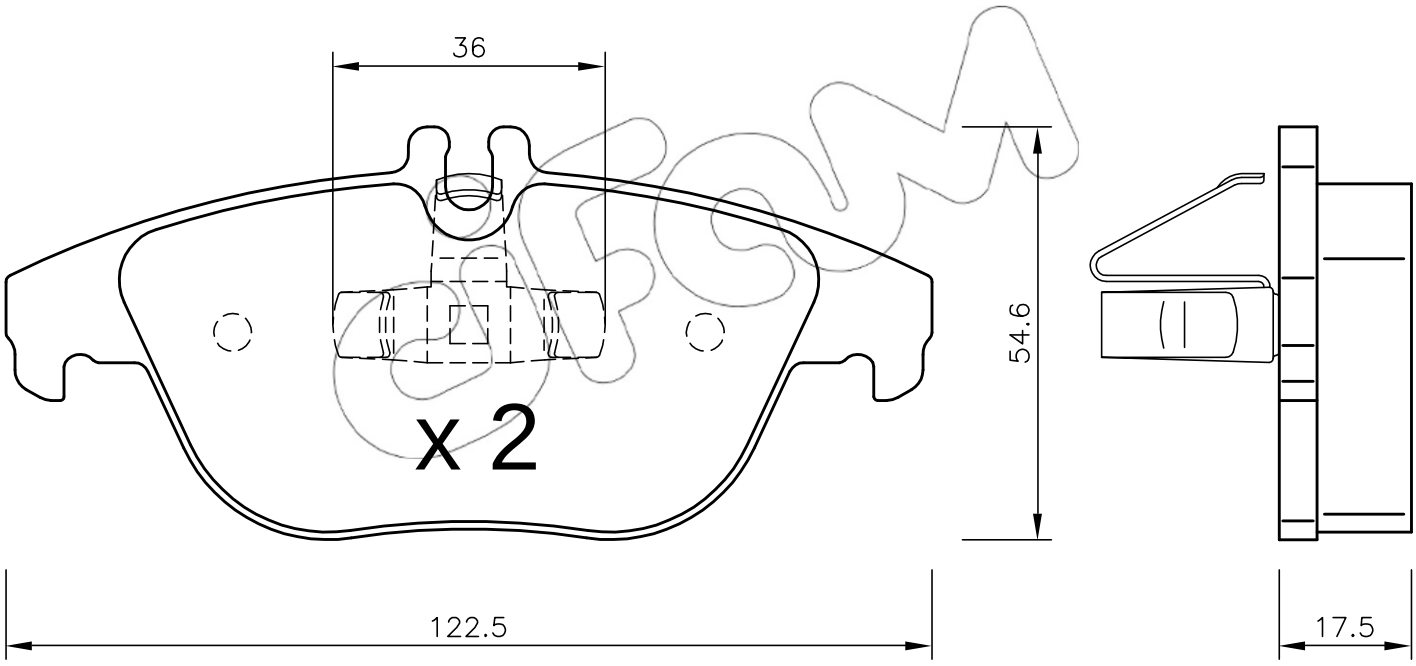
36
54.6
x 2
122.5
17.5

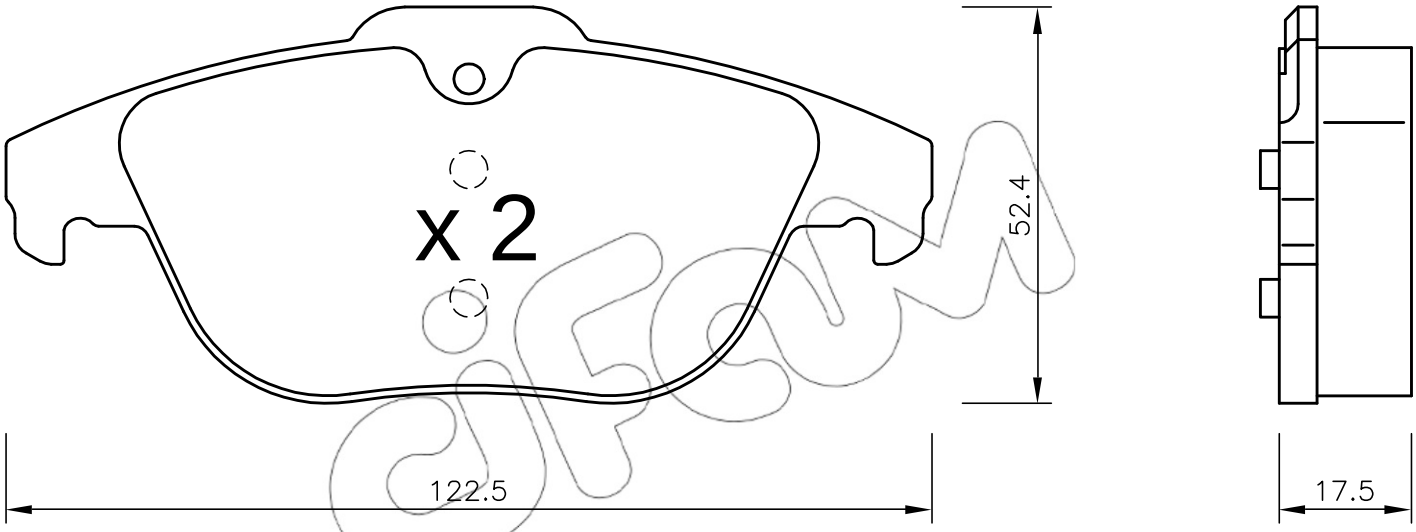
52.4
x 2
122.5
17.5