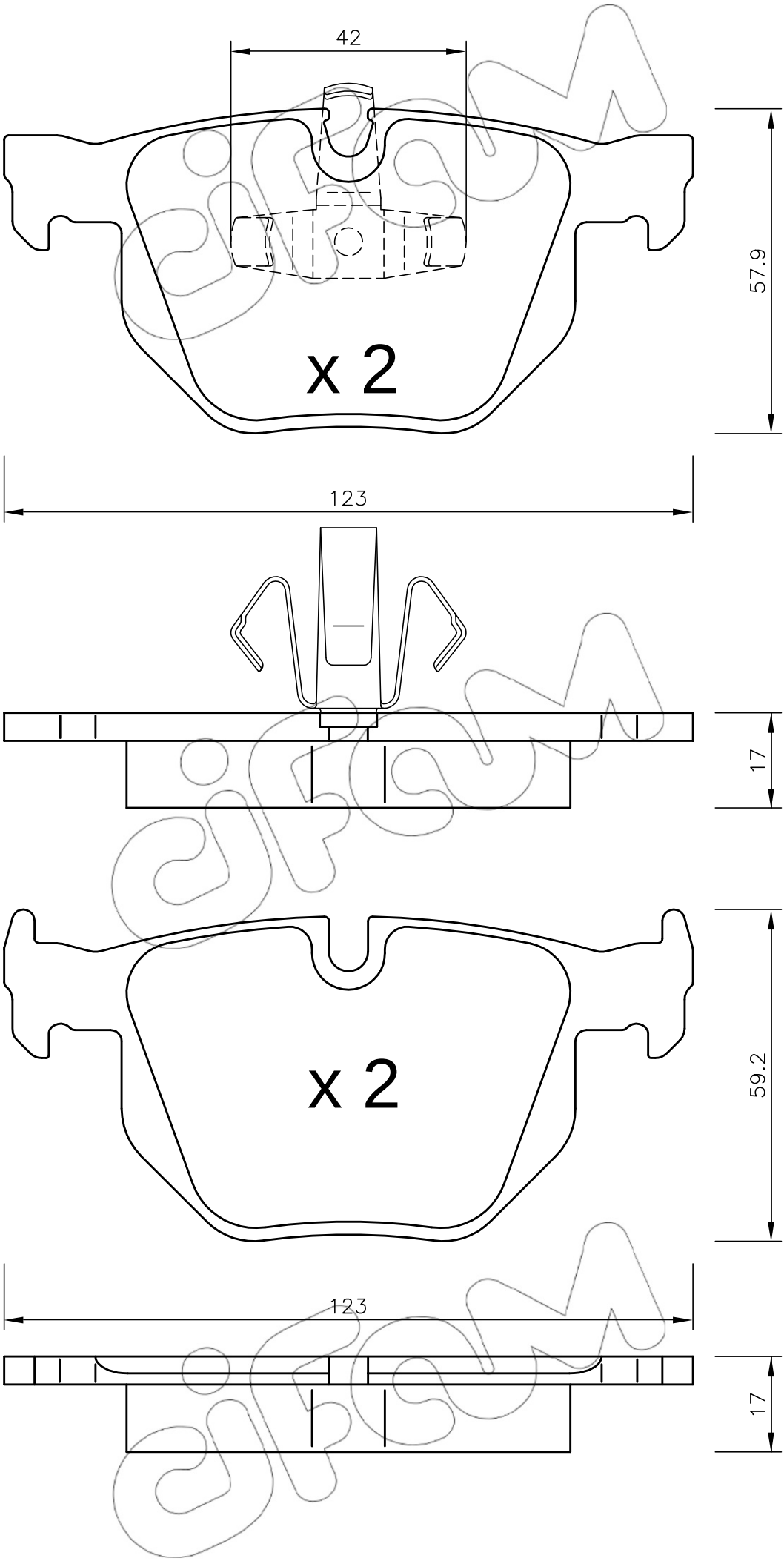
42
57.9
x 2
123
17
59.2
x 2
123
17