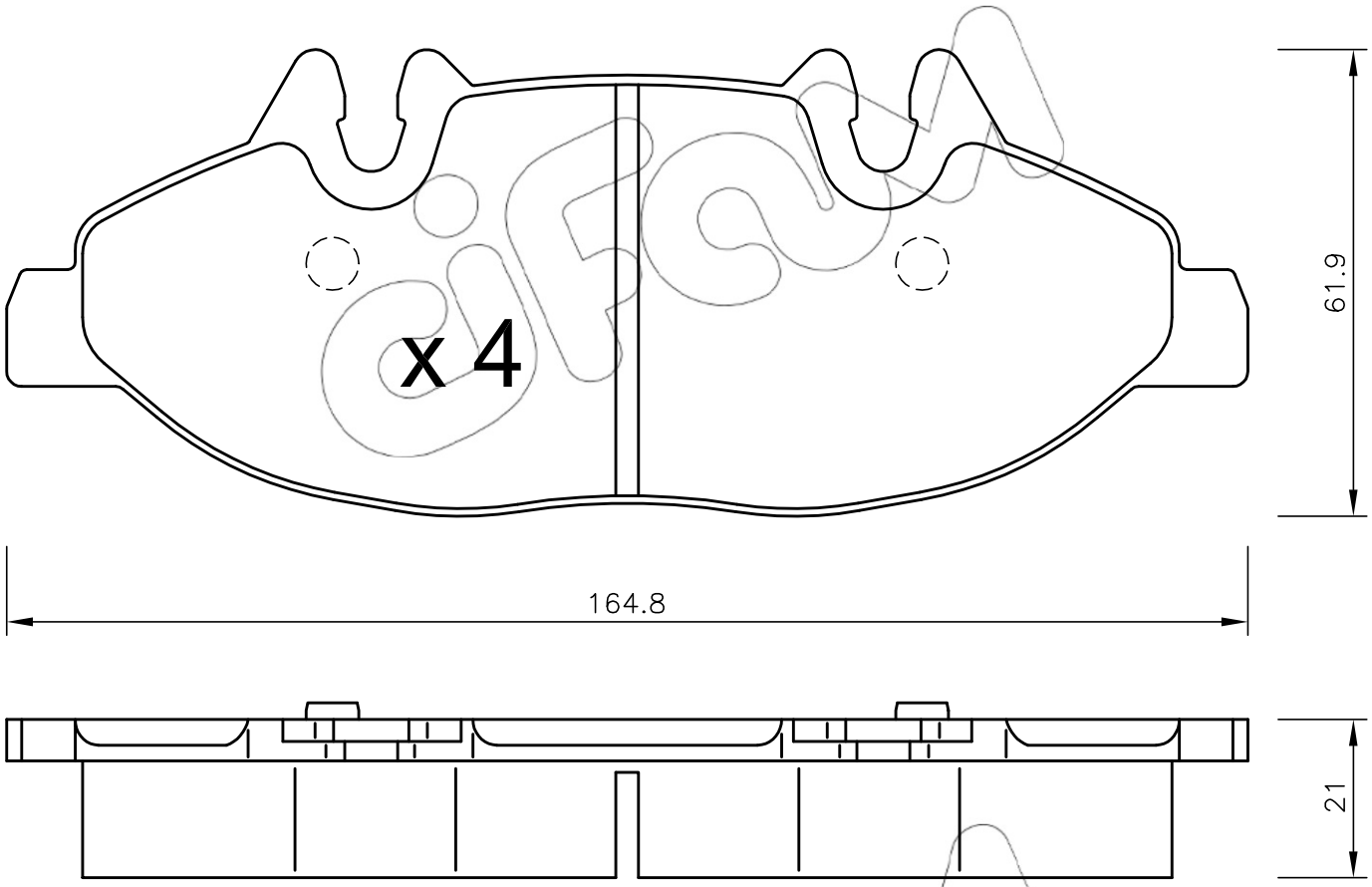
x 4
61.9
164.8
21