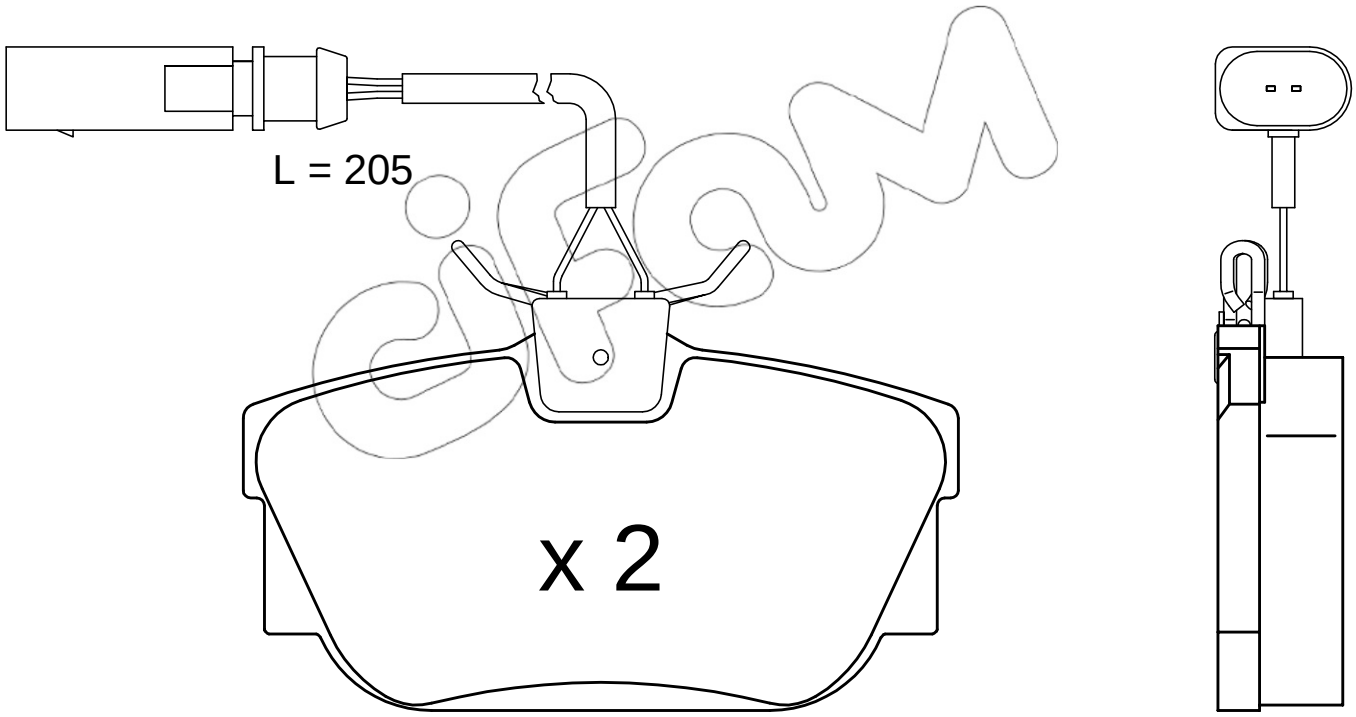
L = 205
x 2

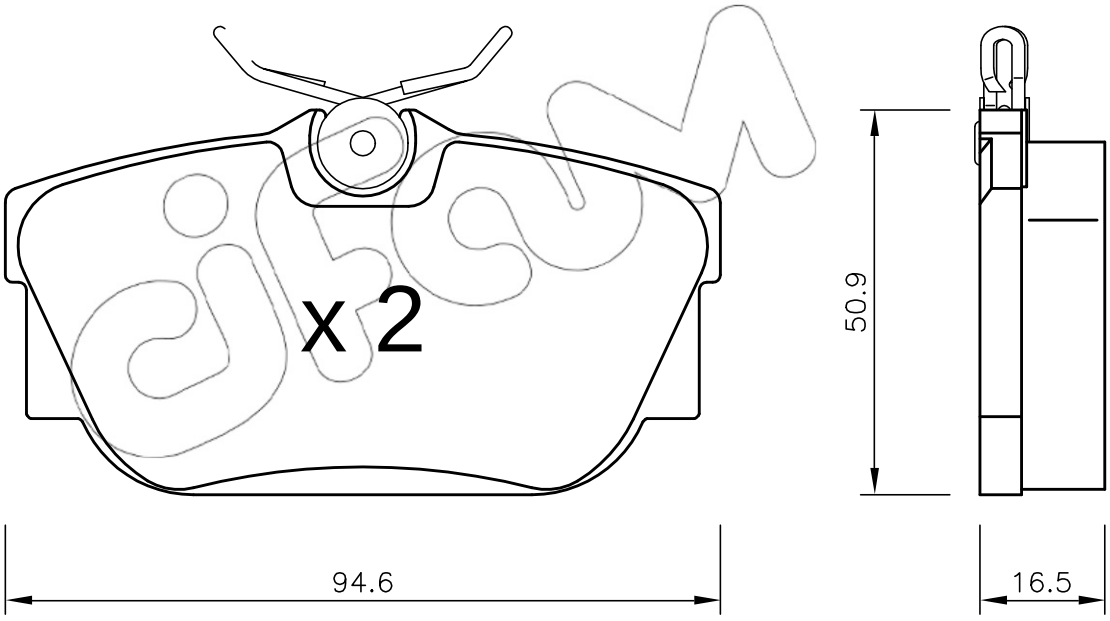
x 2
50.9
94.6
16.5