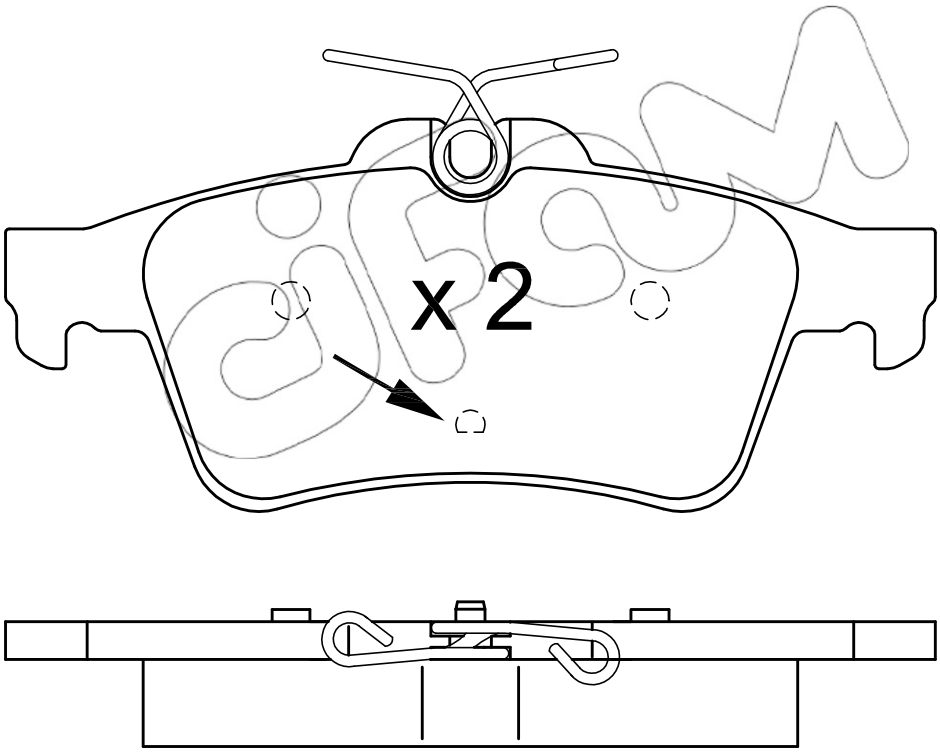
x 2

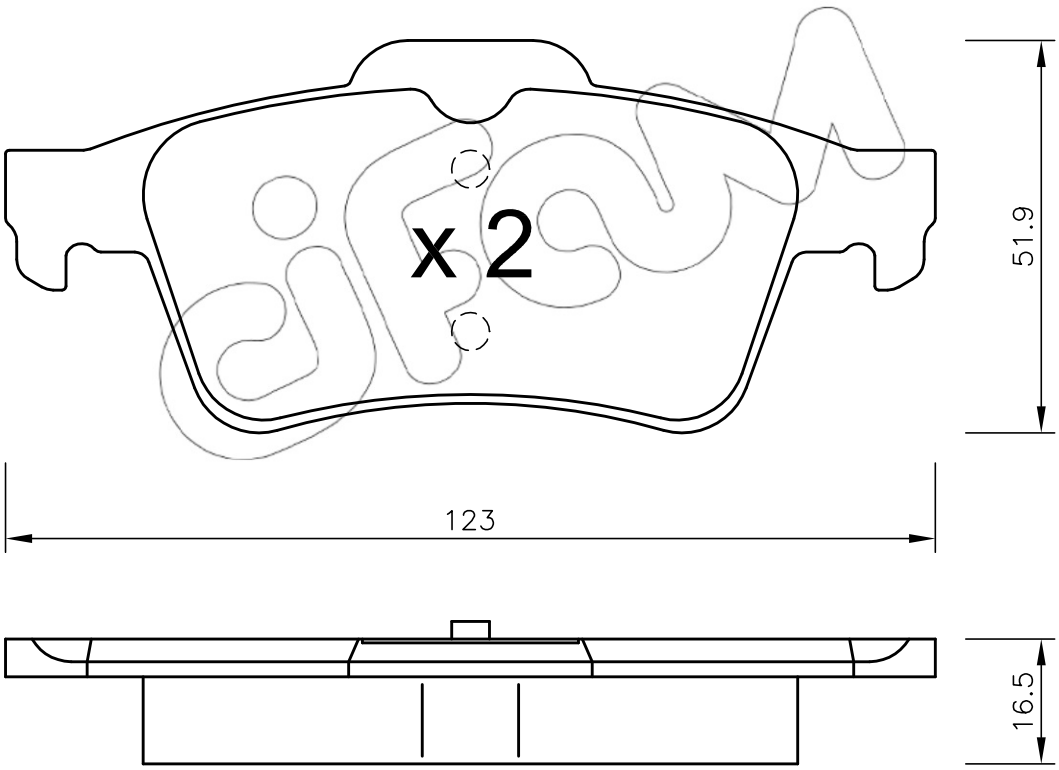
x 2
51.9
123
16.5