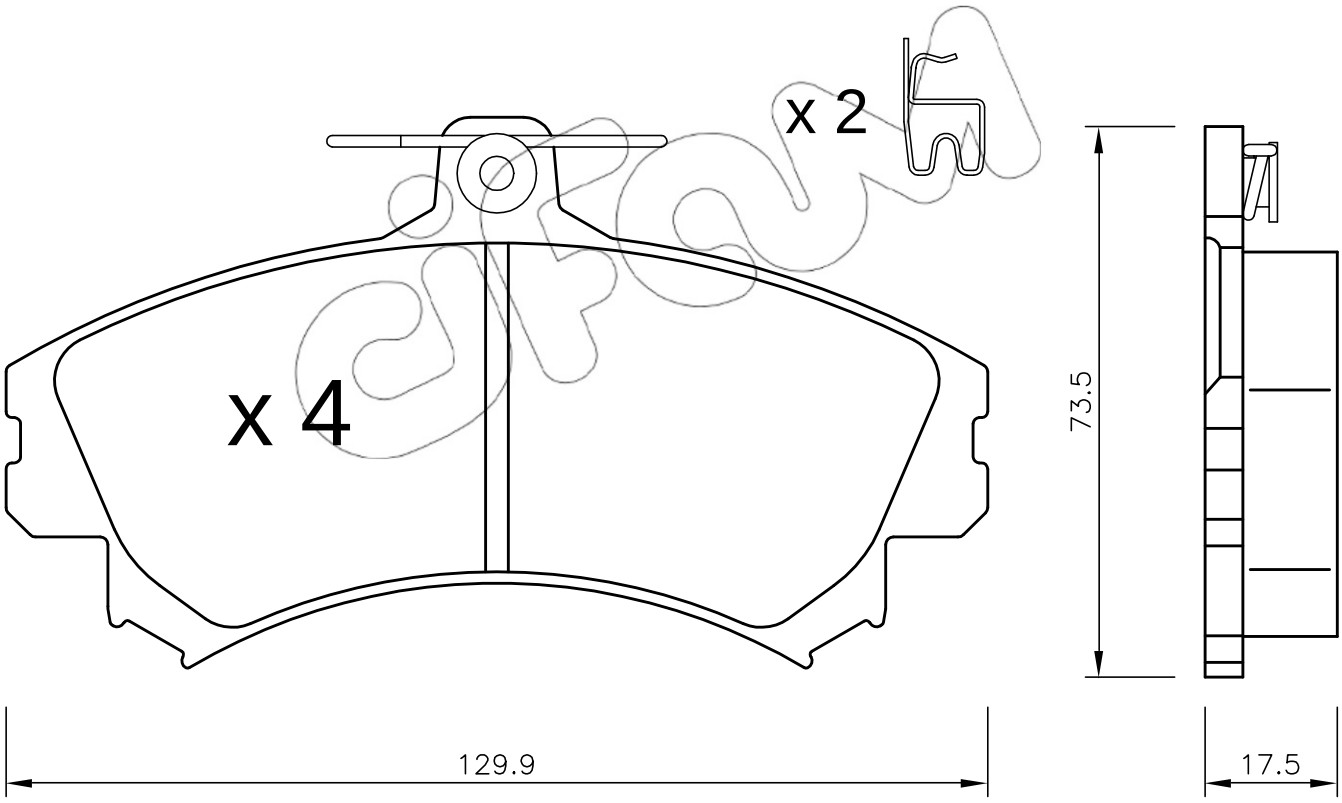
x 2
x 4
73.5
129.9
17.5