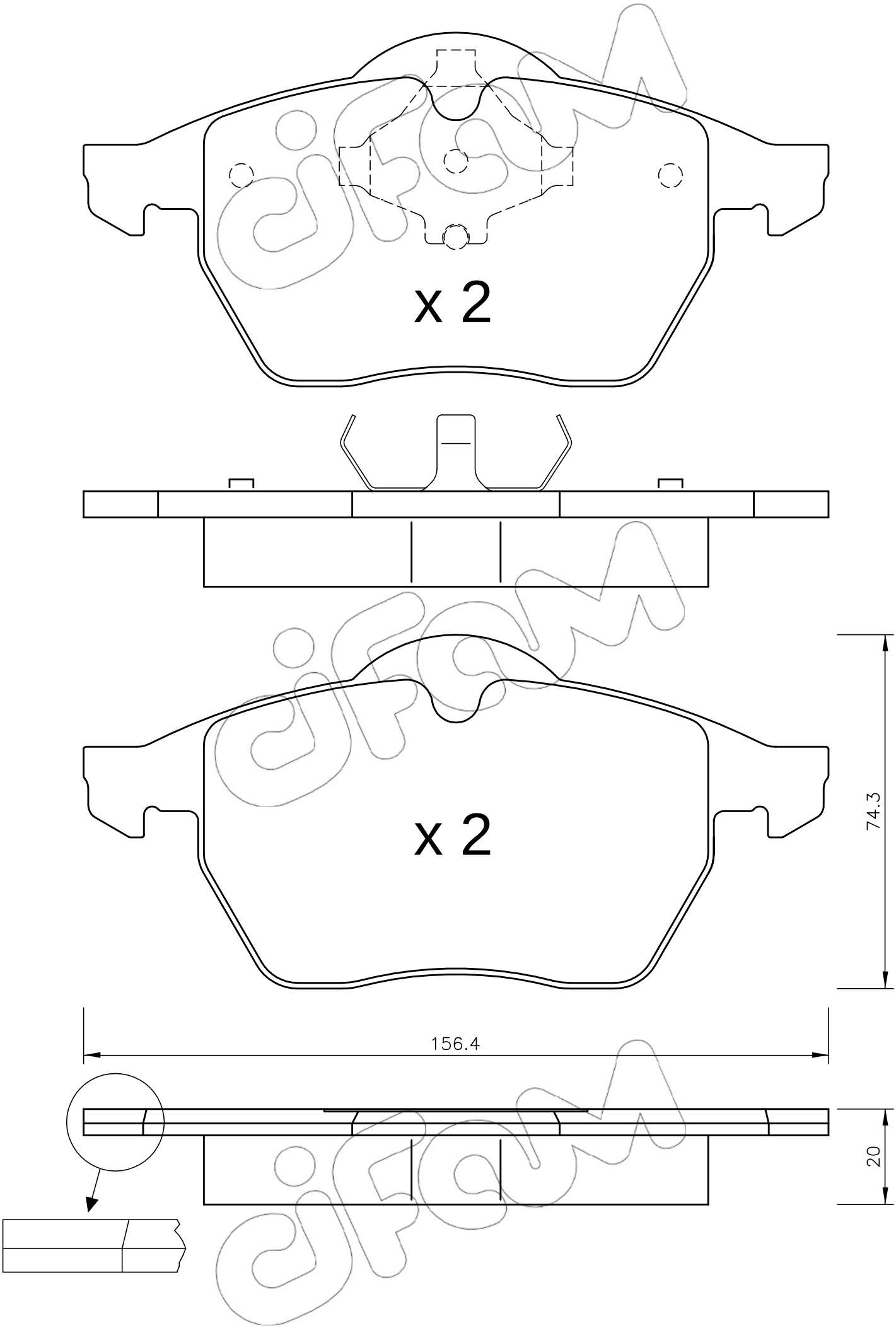
x 2
x 2
74.3
156.4
20