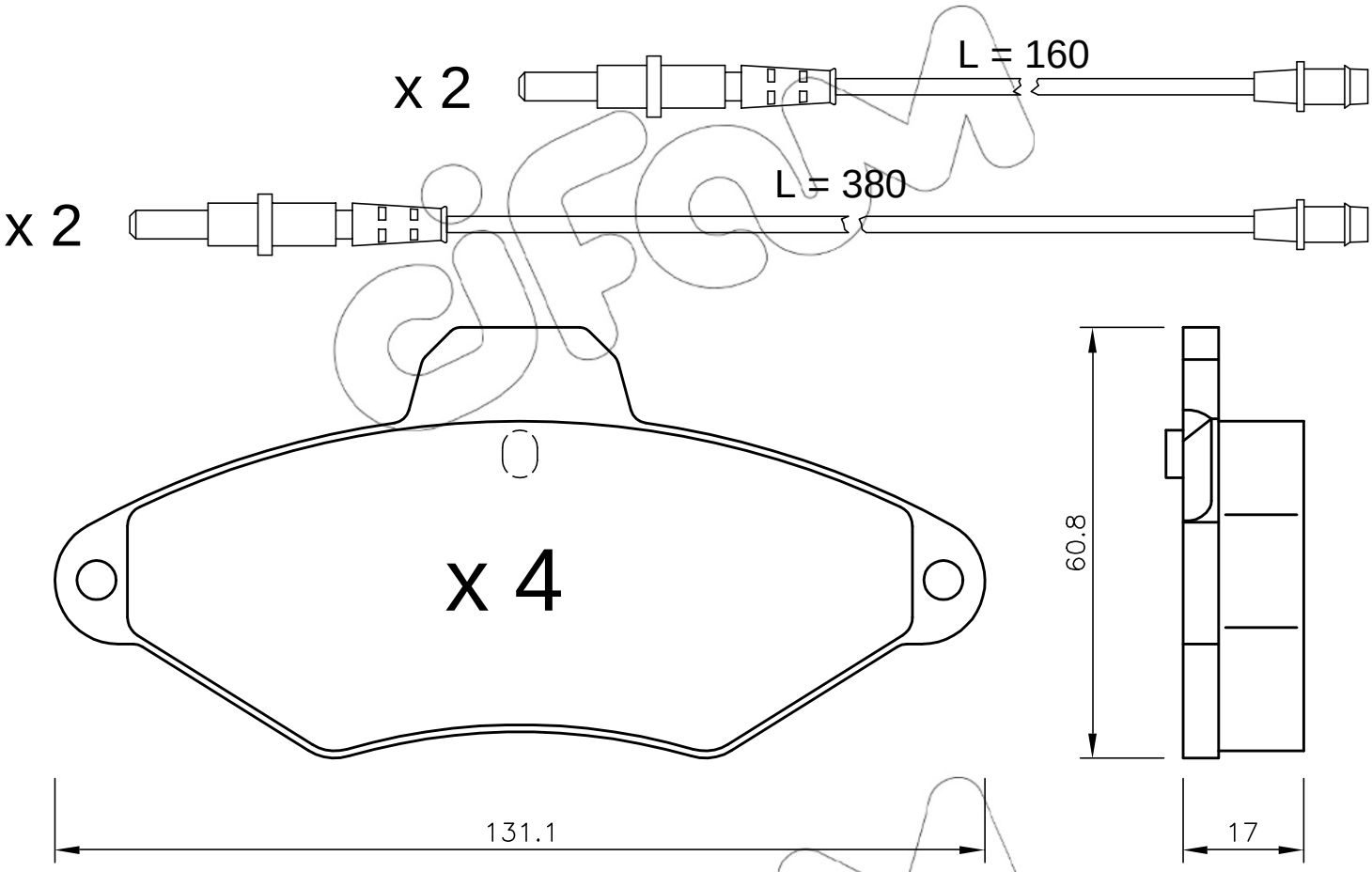
x 2
L = 160
x 2
L = 380
x 4
60.8
131.1
17