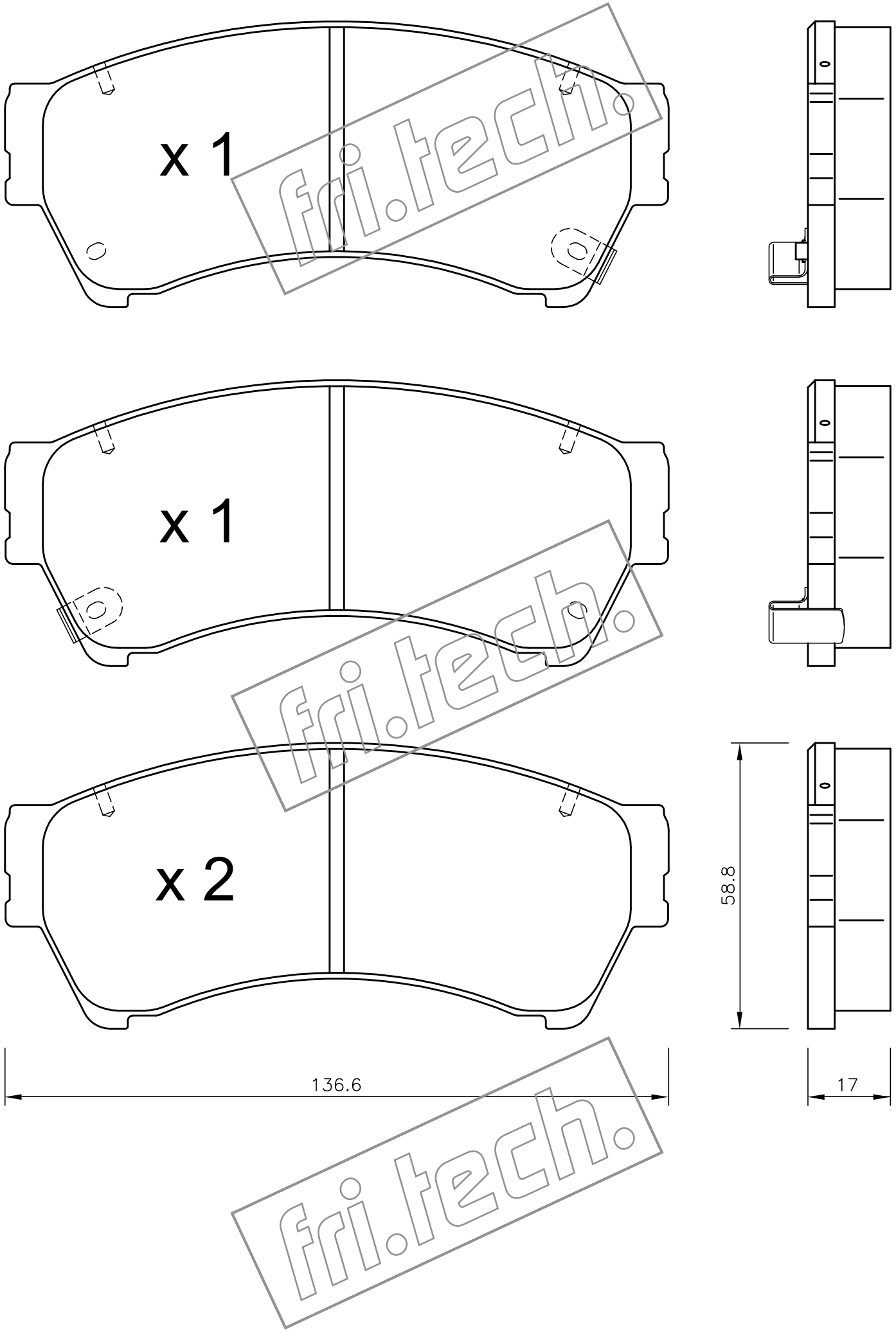
x 1
x 1
x 2
58.8
136.6
17
fri.tech.
fri.tech.
fri.tech.