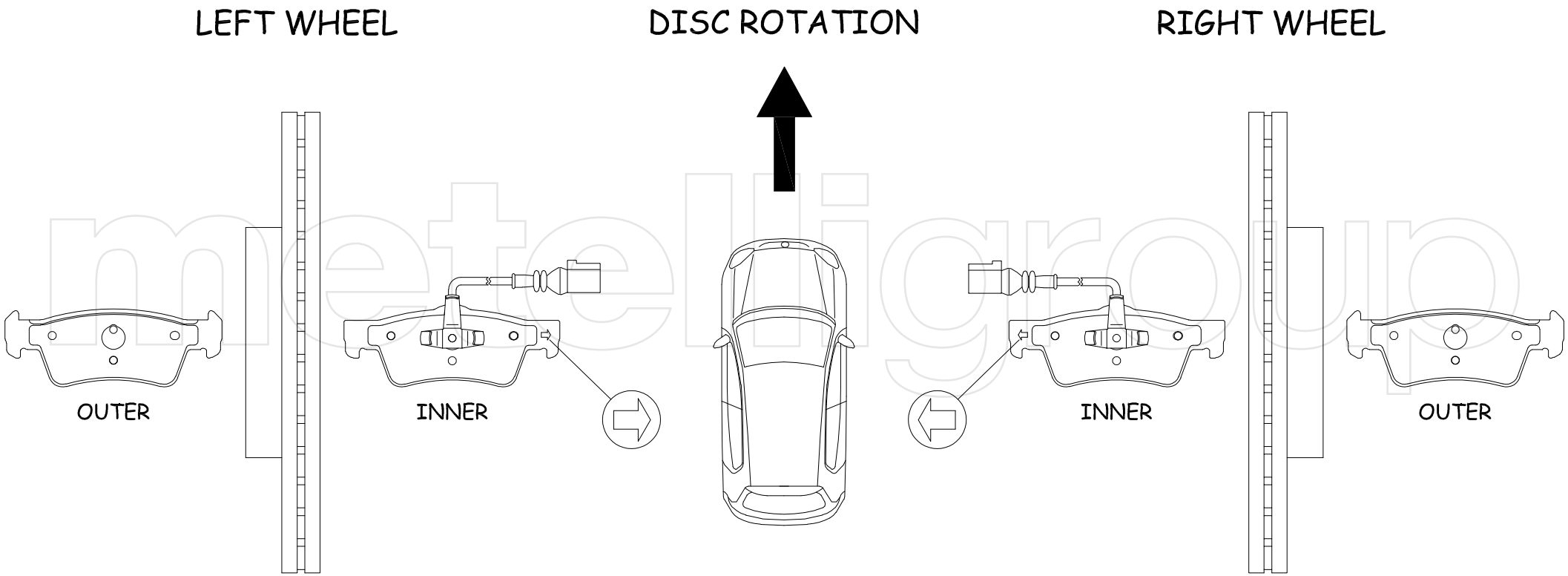

metelligroup