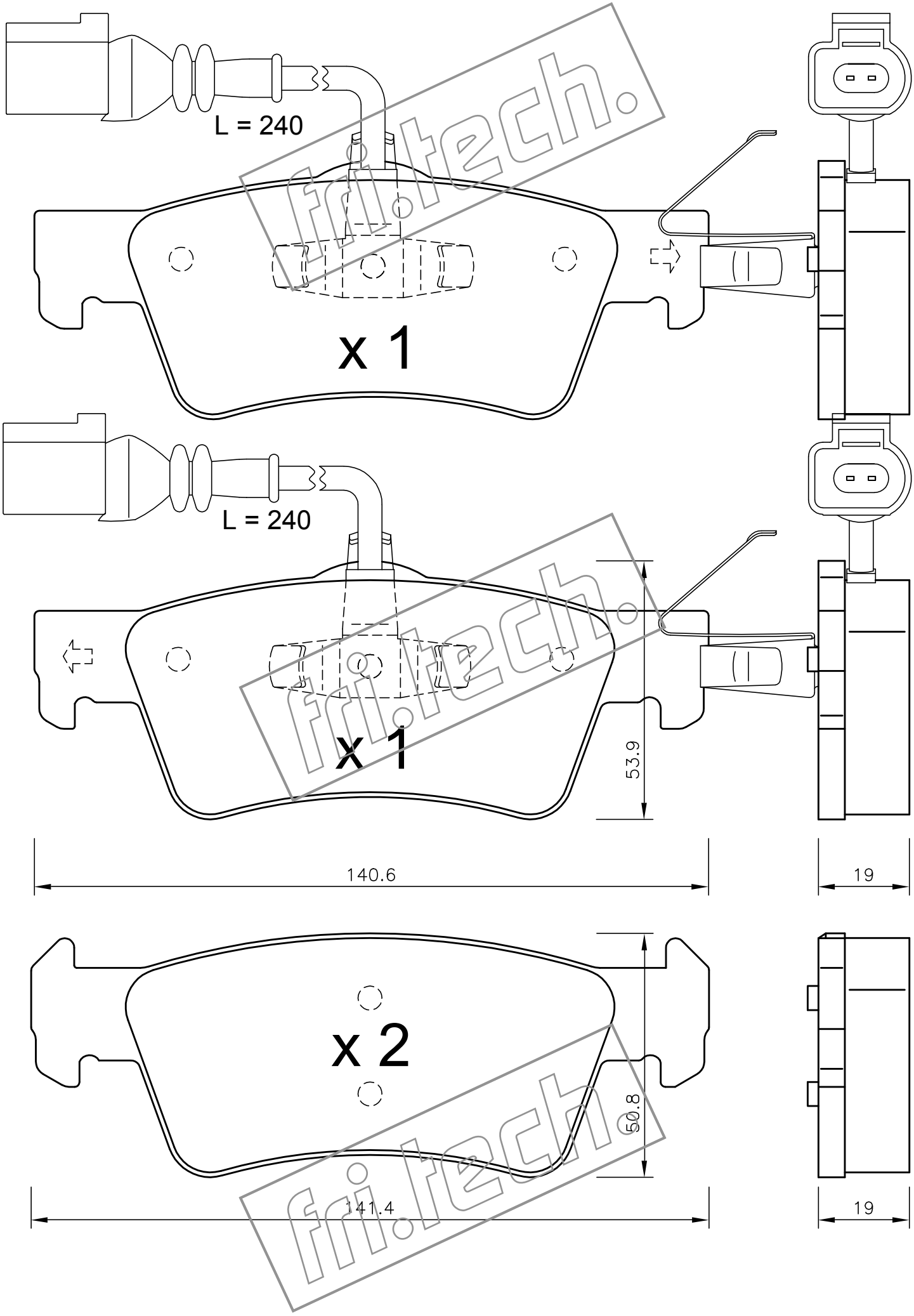
L = 240
x 1
L = 240
x 1
53.9
140.6
19
x 2
50.8
141.4
19
fri.tech.
fri.tech.
fri.tech.