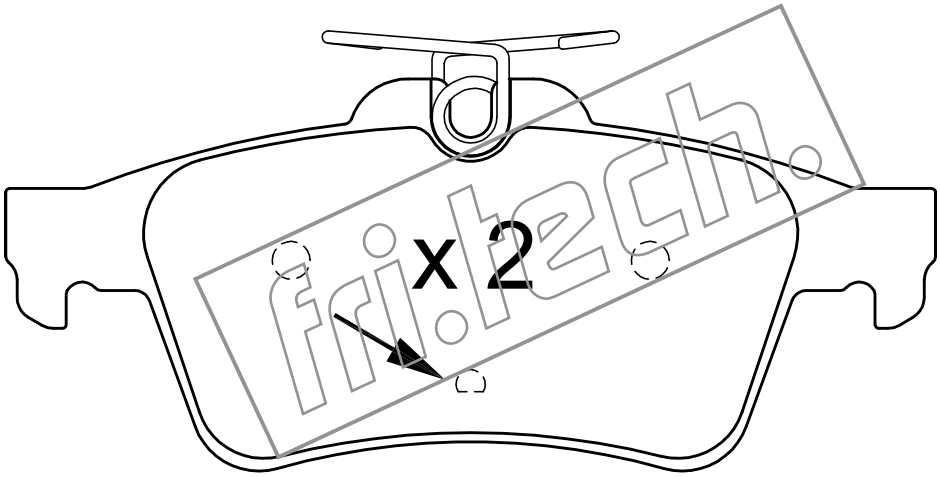

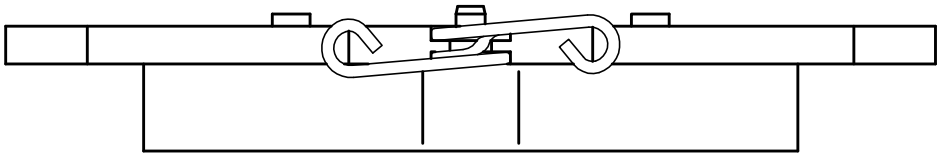

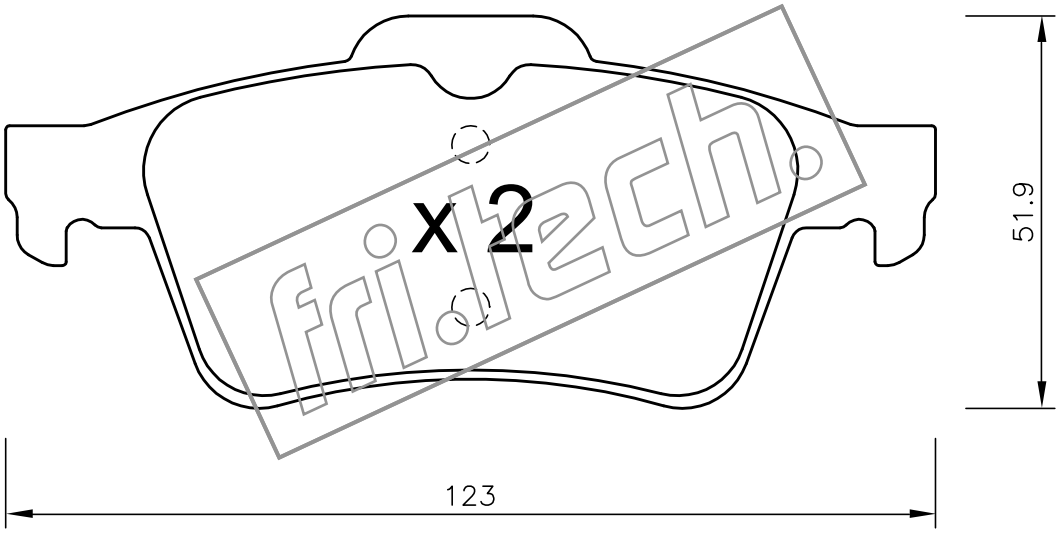

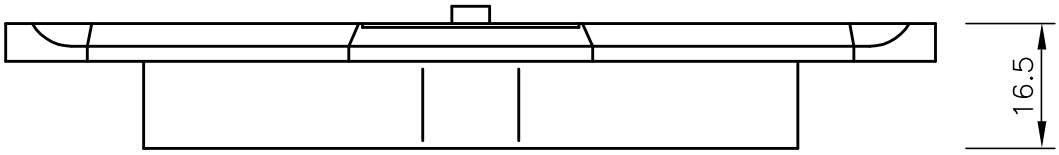

fri.tech.