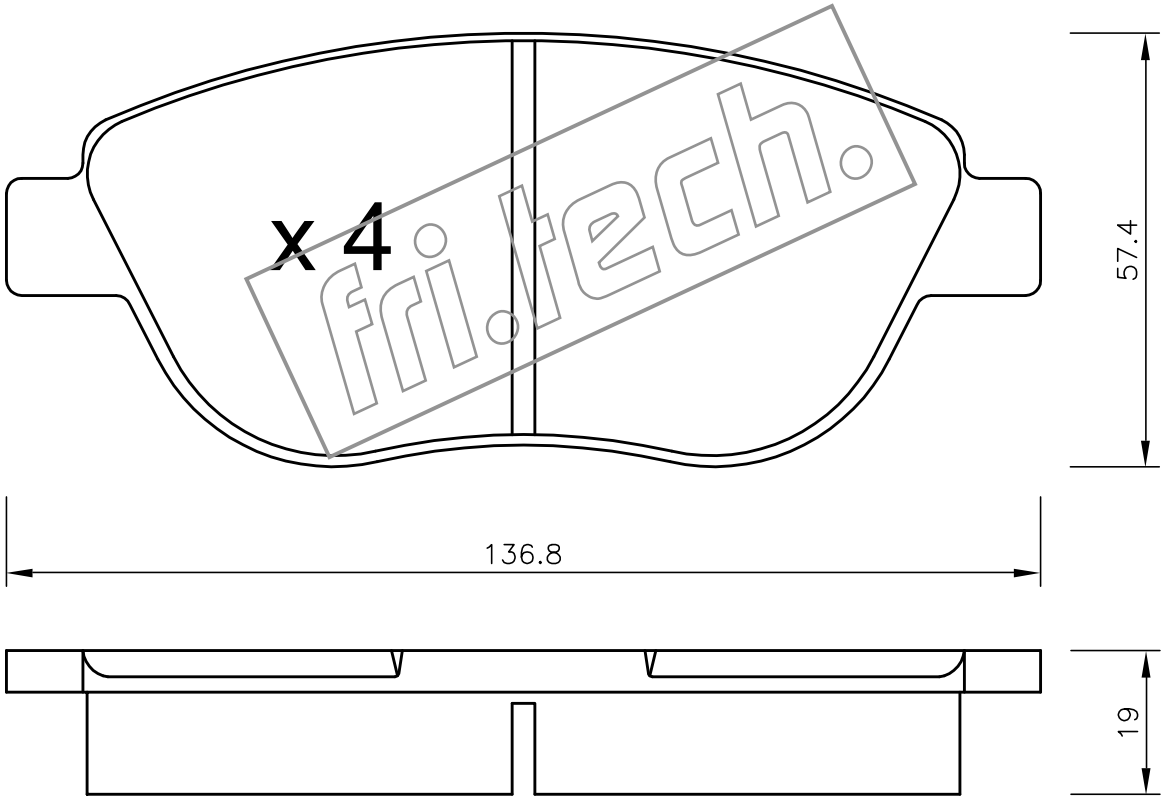

fri.tech.
fri.tech.
fri.tech.