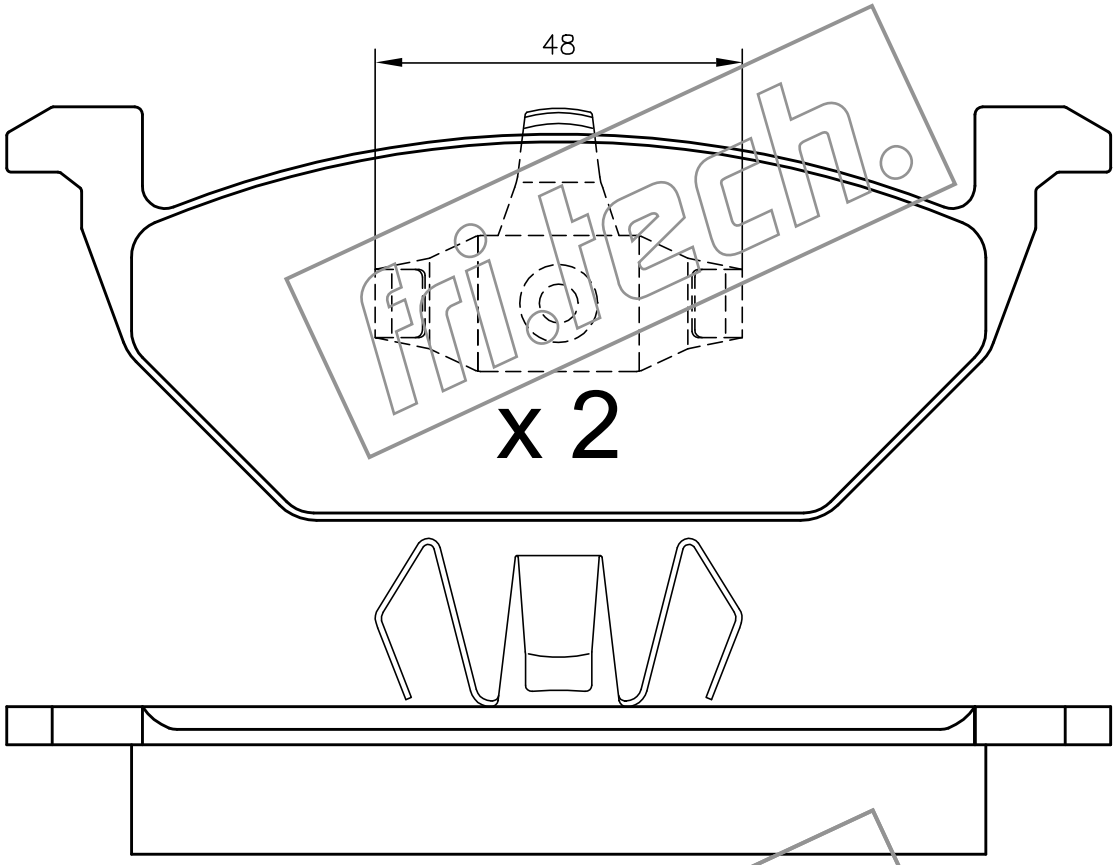

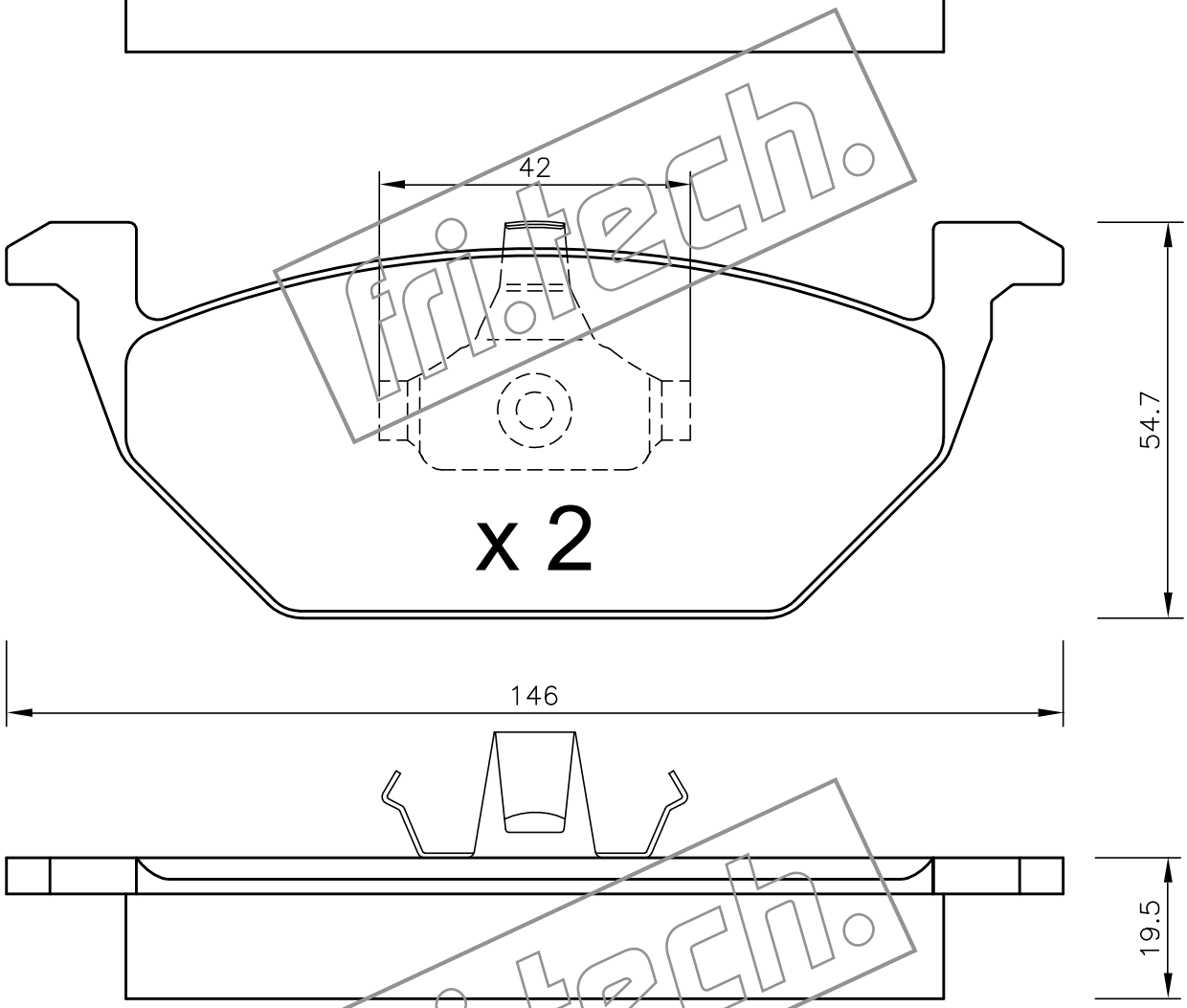

fri.tech.