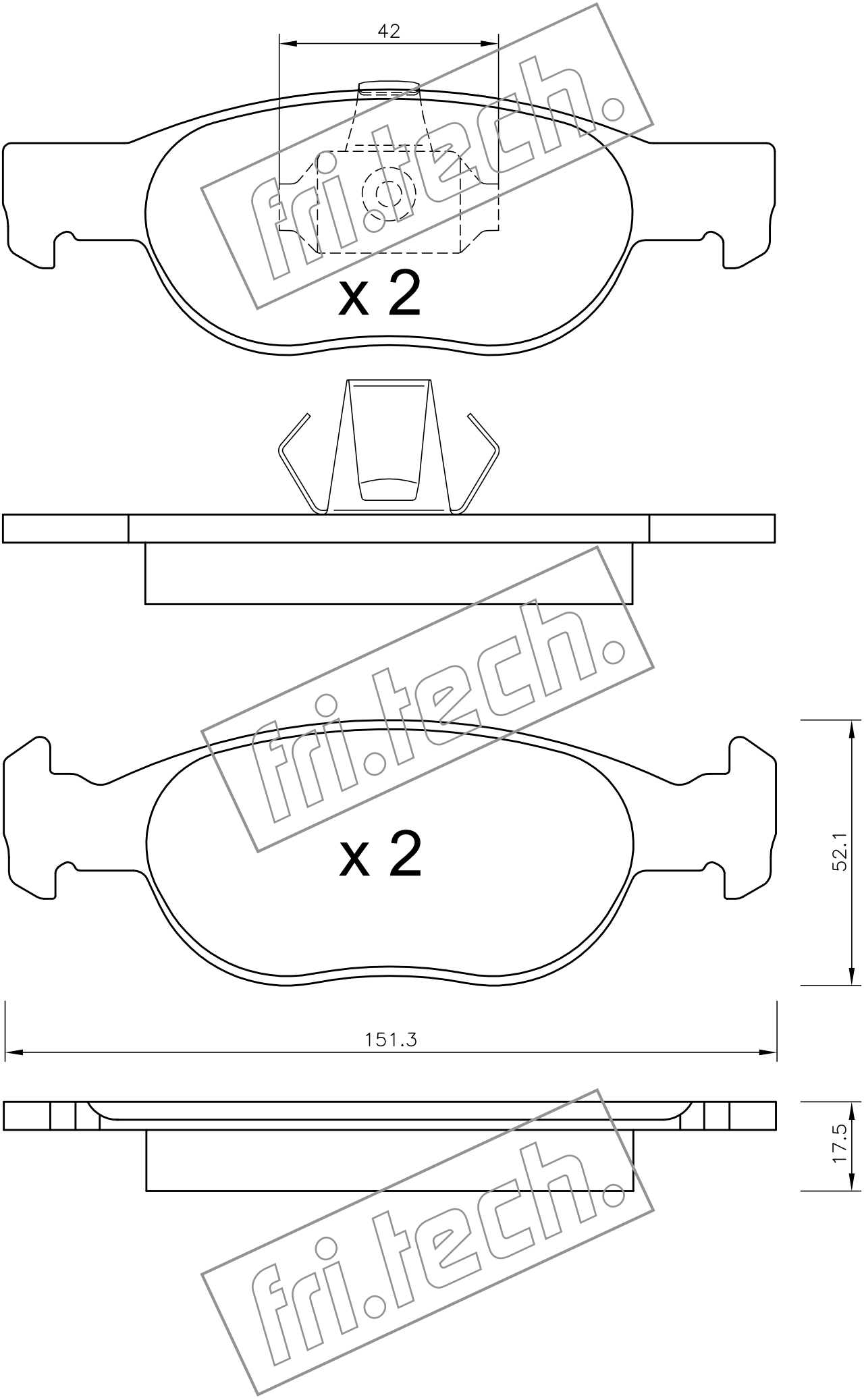
42
x 2
x 2
52.1
151.3
17.5
fri.tech.
fri.tech.
fri.tech.