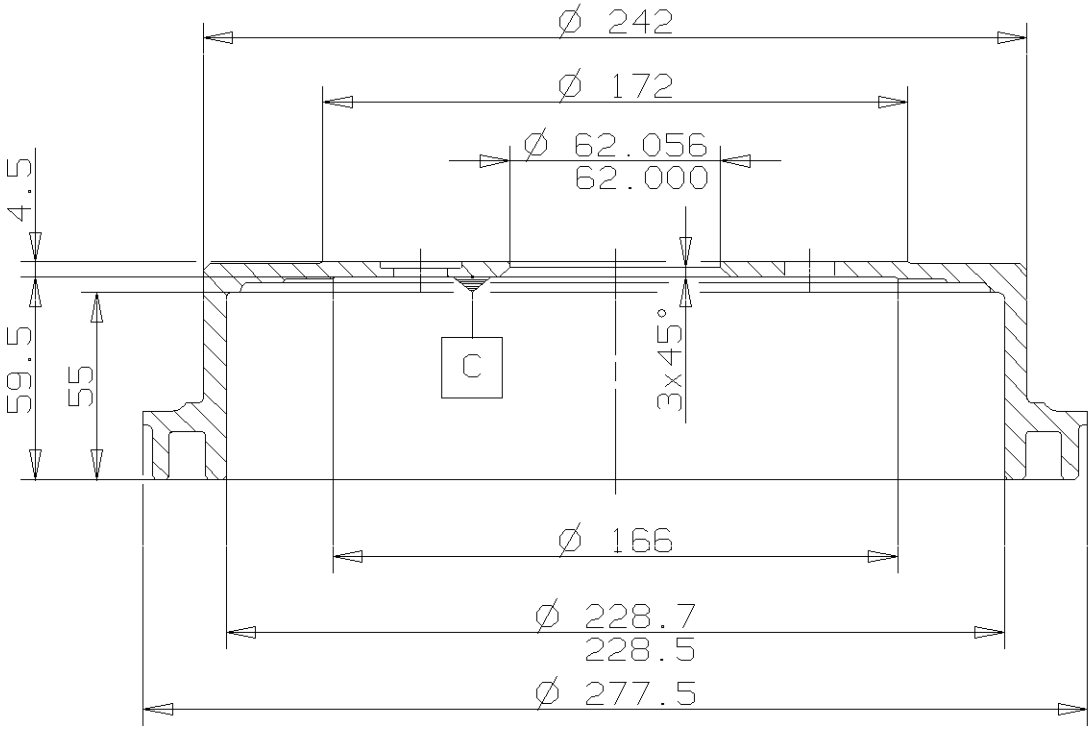

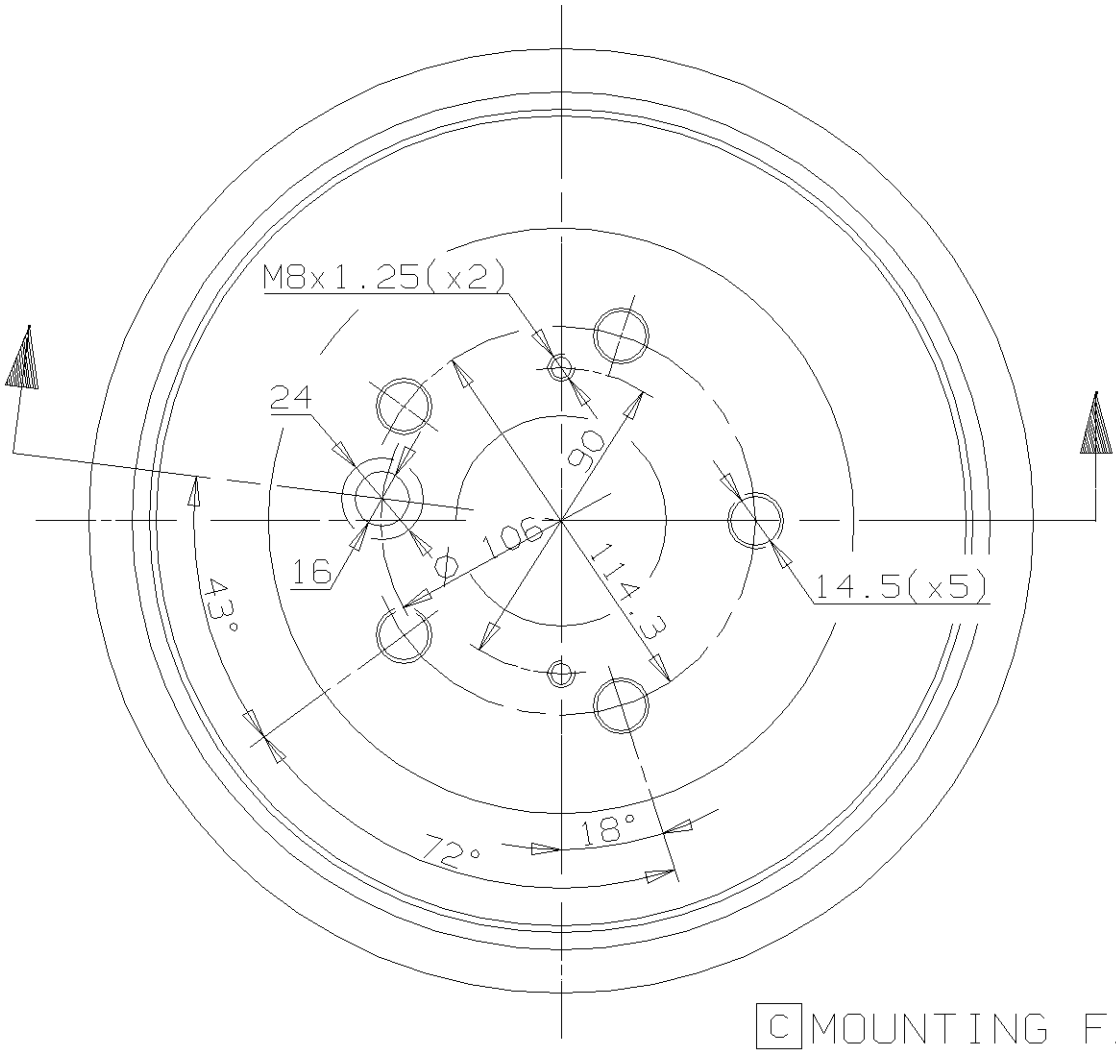

C MOUNTING FACE

Max.DIA. 230.6 mm

Weight 4.5 Kg