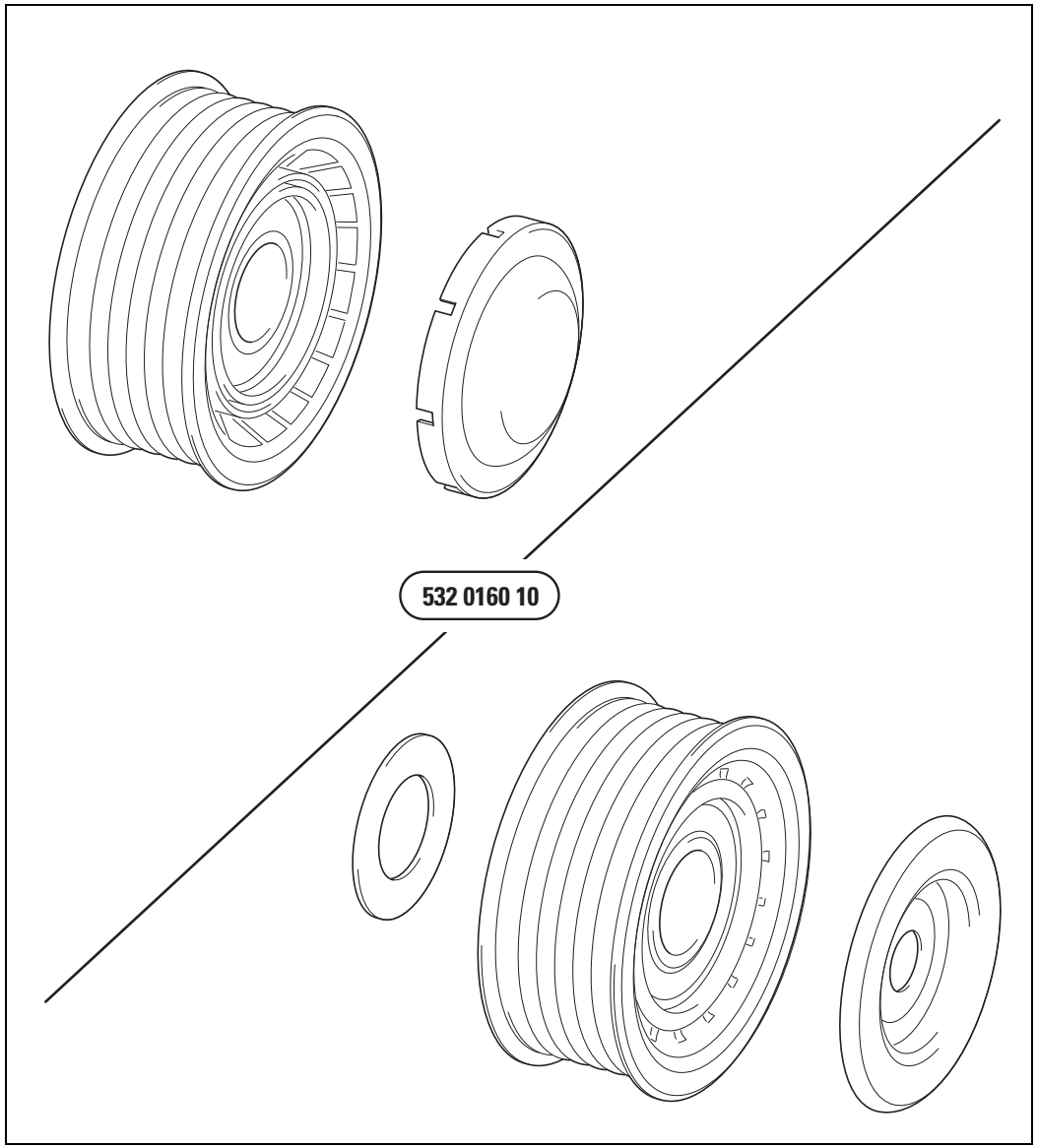

SERVICE

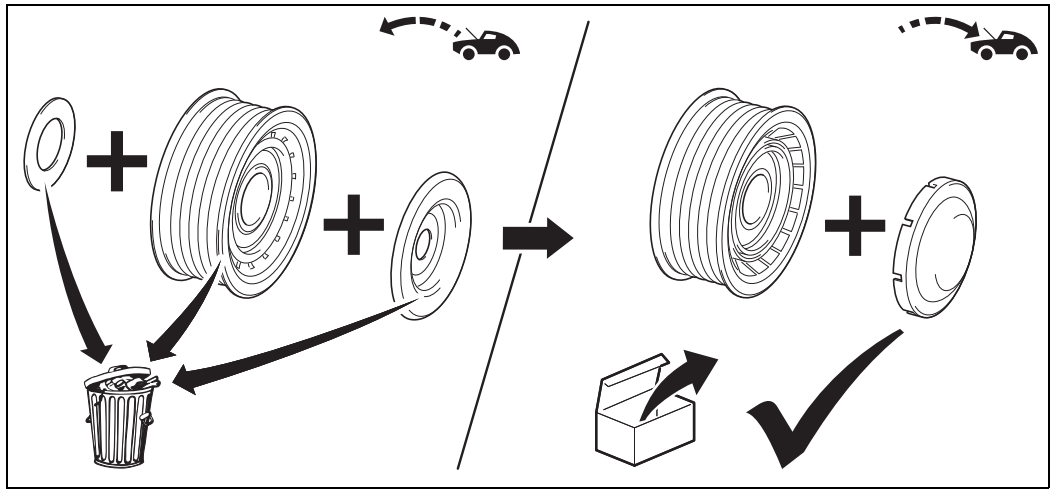

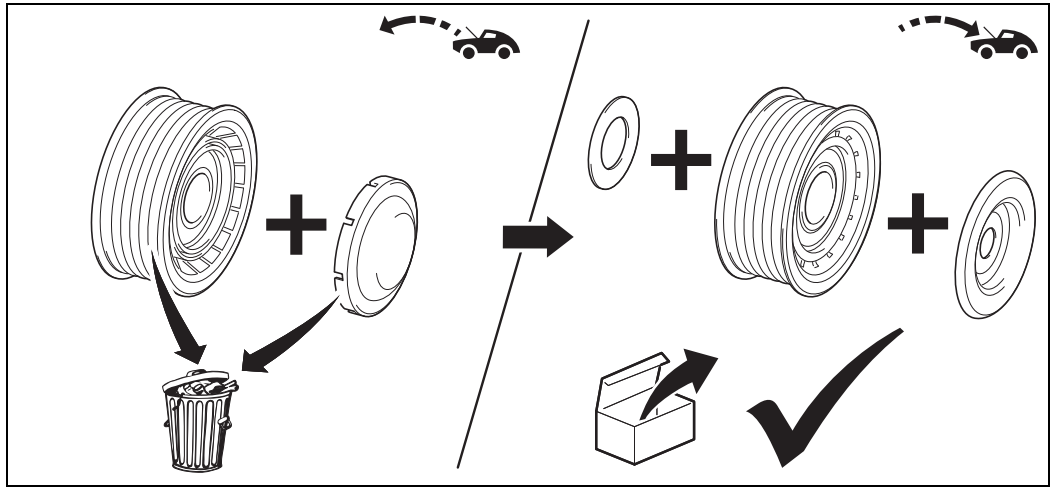

999 6006 290 © 2013 www.Schaeffler-Aftermarket.com