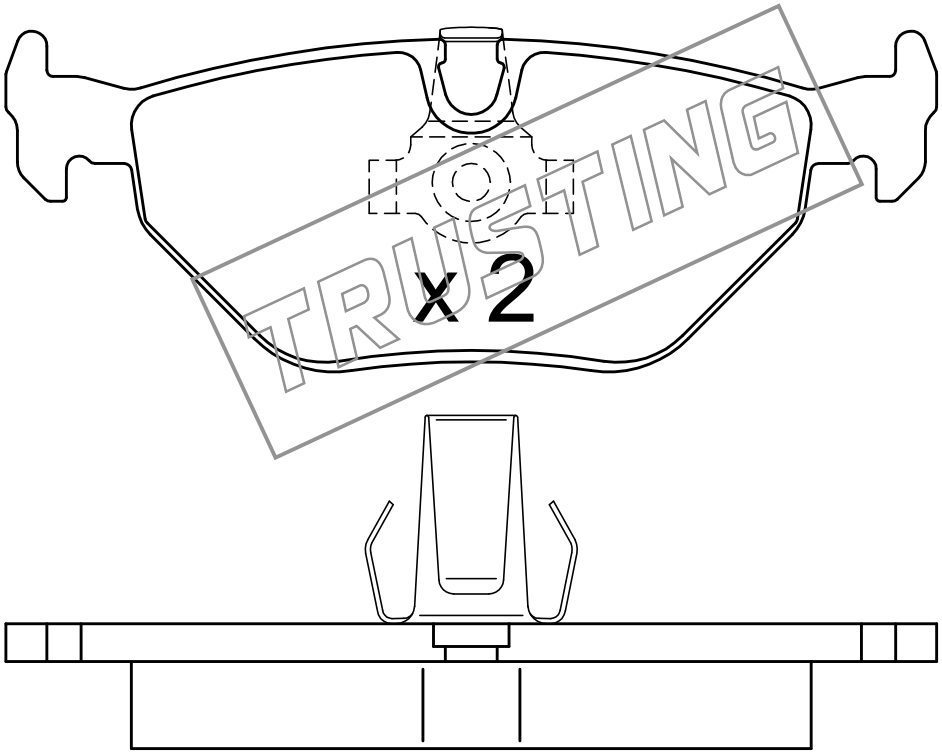

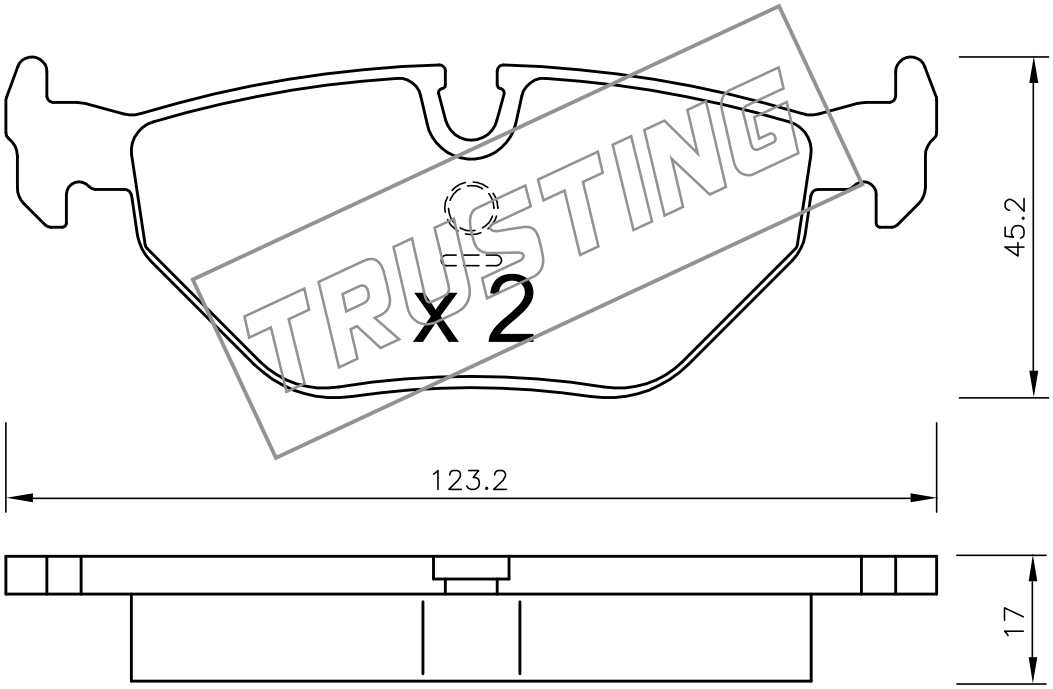

TRUSTING