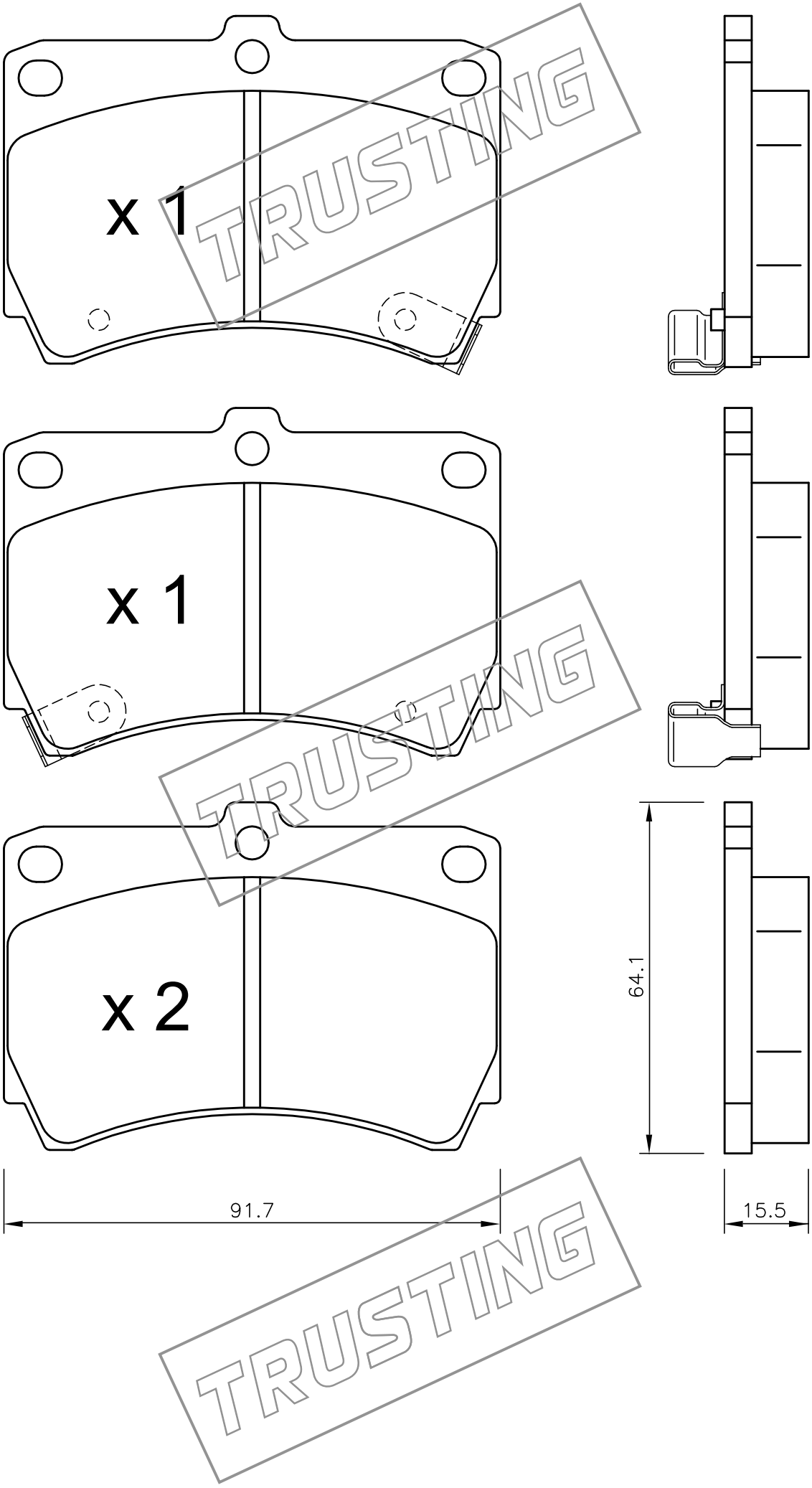
x 1
x 1
x 2
64.1
91.7
15.5
TRUSTING
TRUSTING
TRUSTING