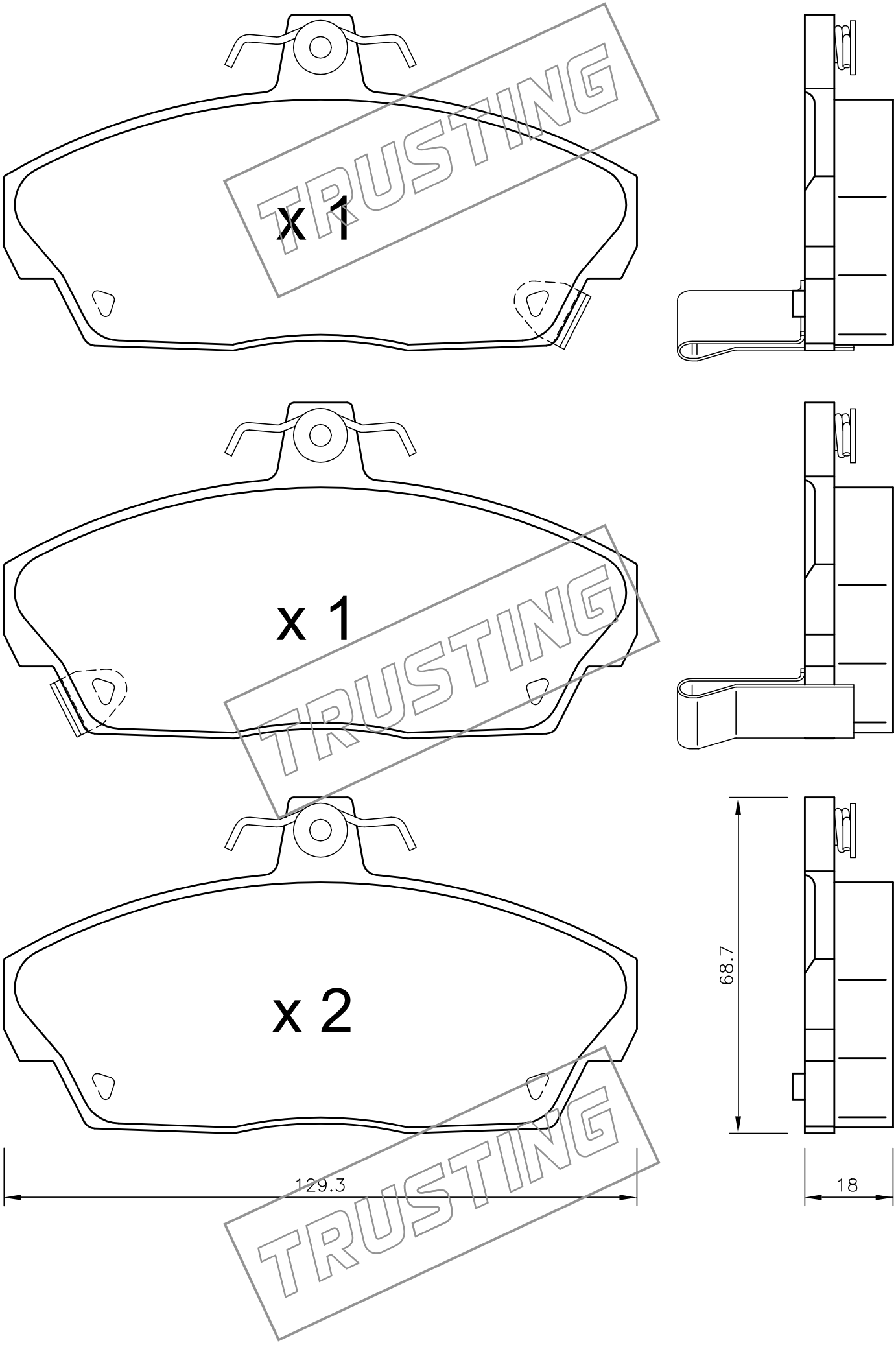
x 1
x 1
x 2
68.7
129.3
18
TRUSTING
TRUSTING
TRUSTING