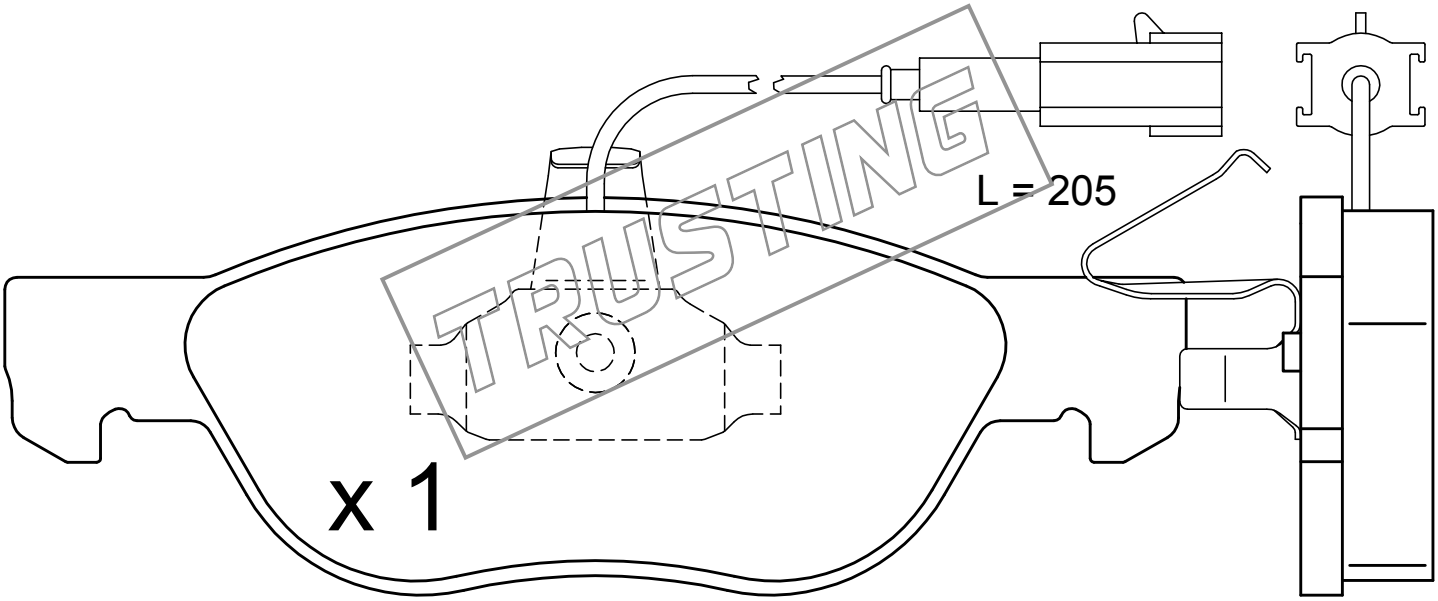

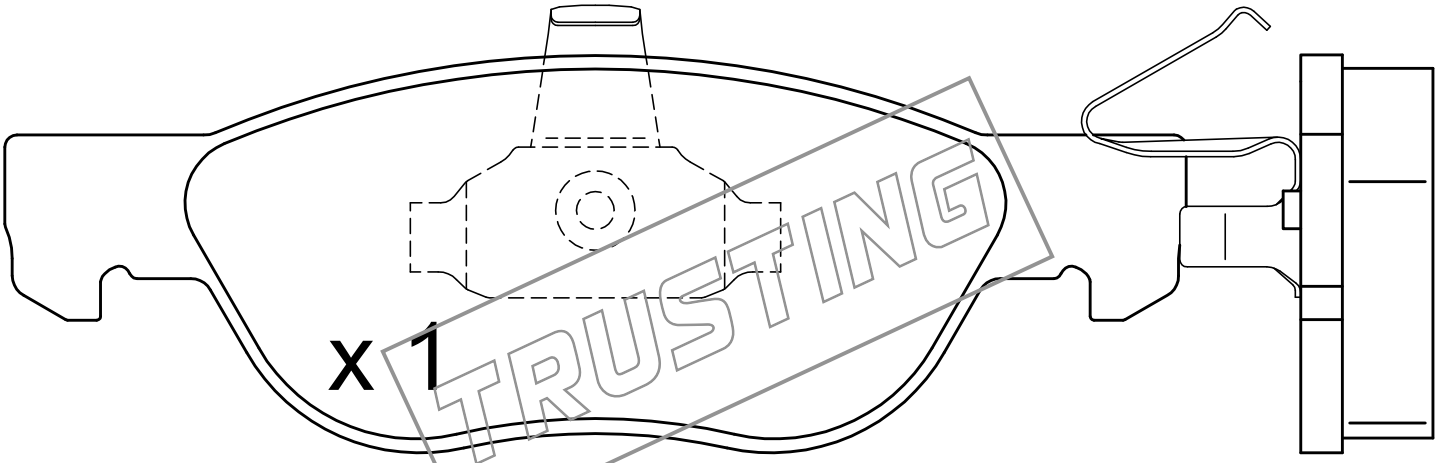

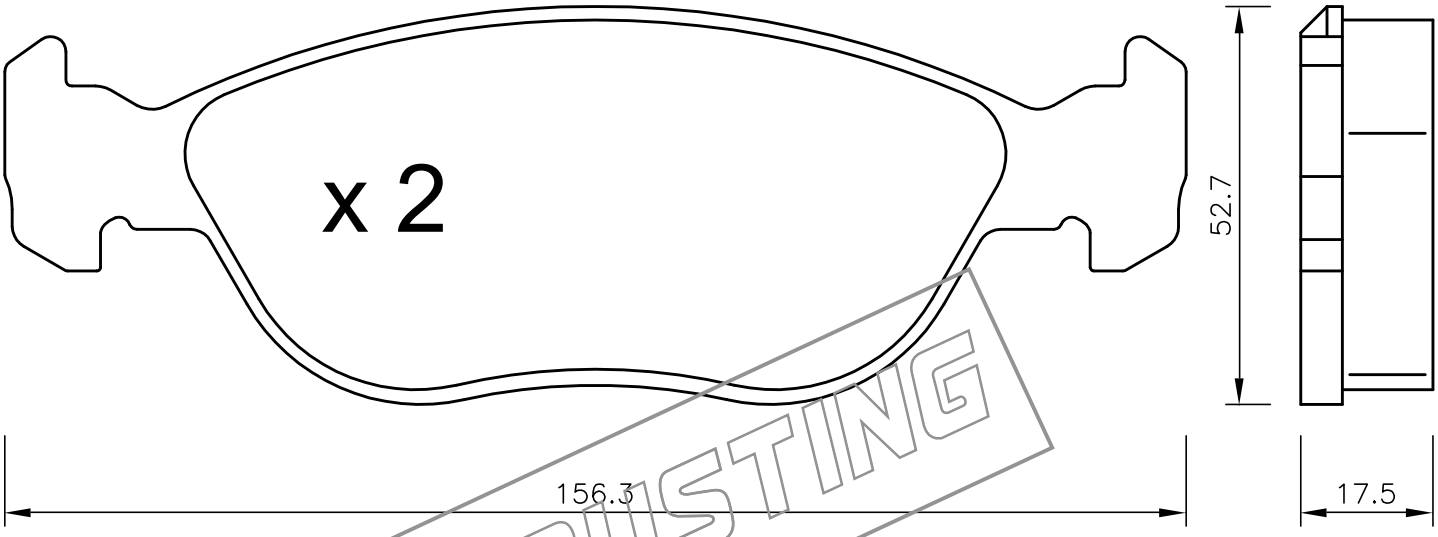

TRUSTING