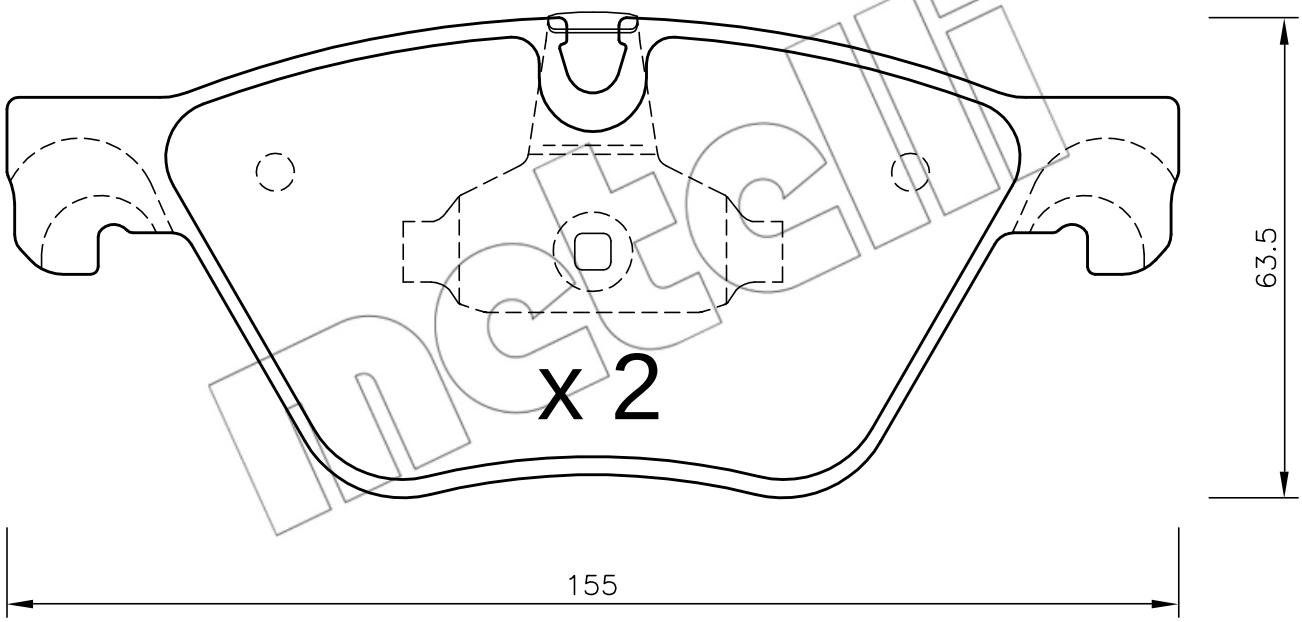
x 2
63.5
155

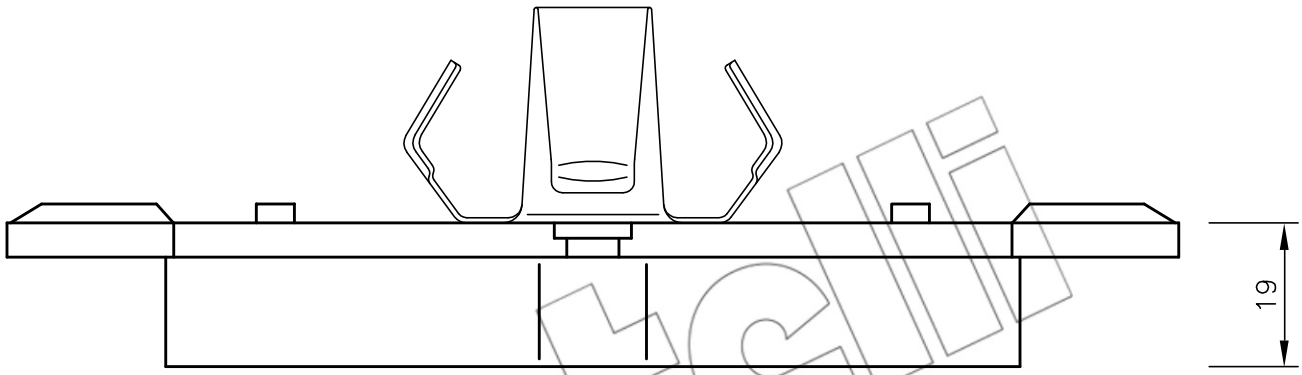
19

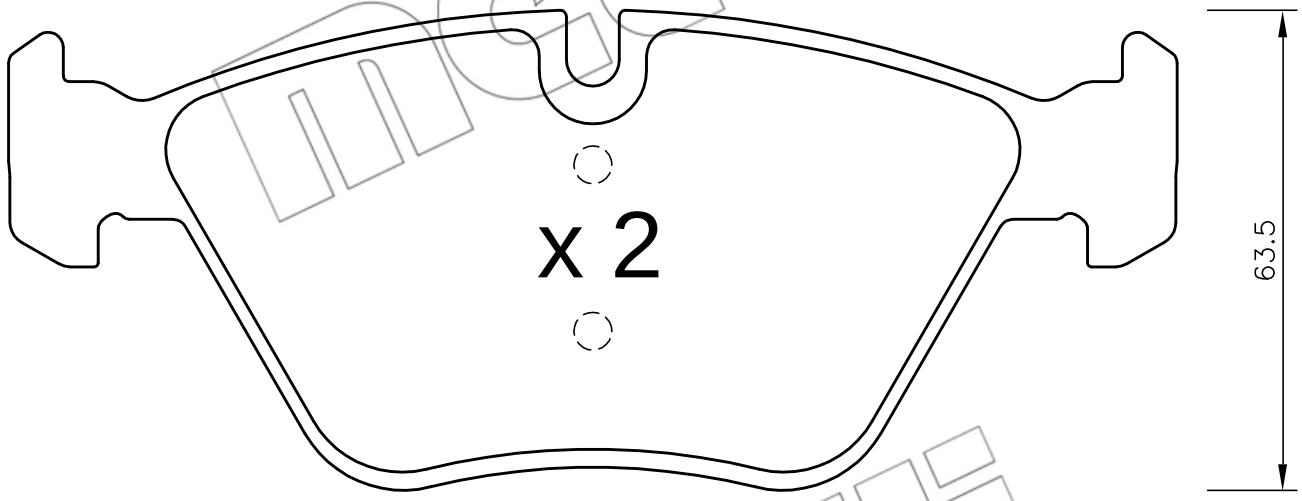
x 2
63.5
154.6

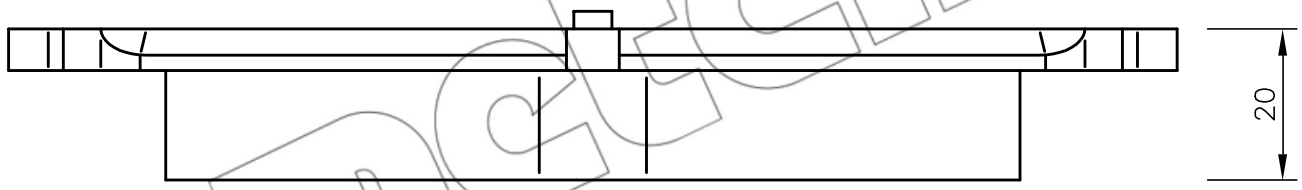
20