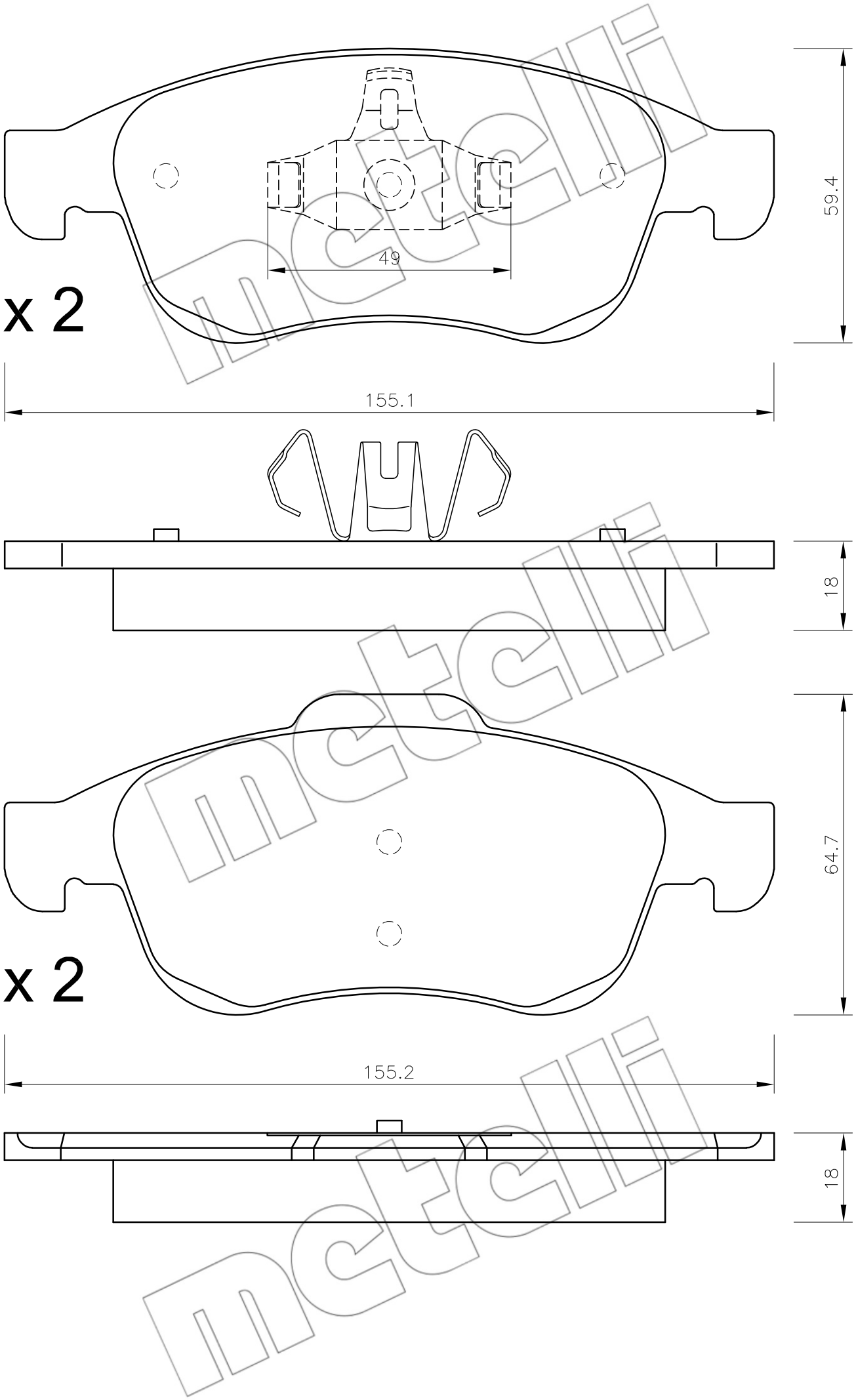
x 2
49
59.4
155.1
18
x 2
64.7
155.2
18