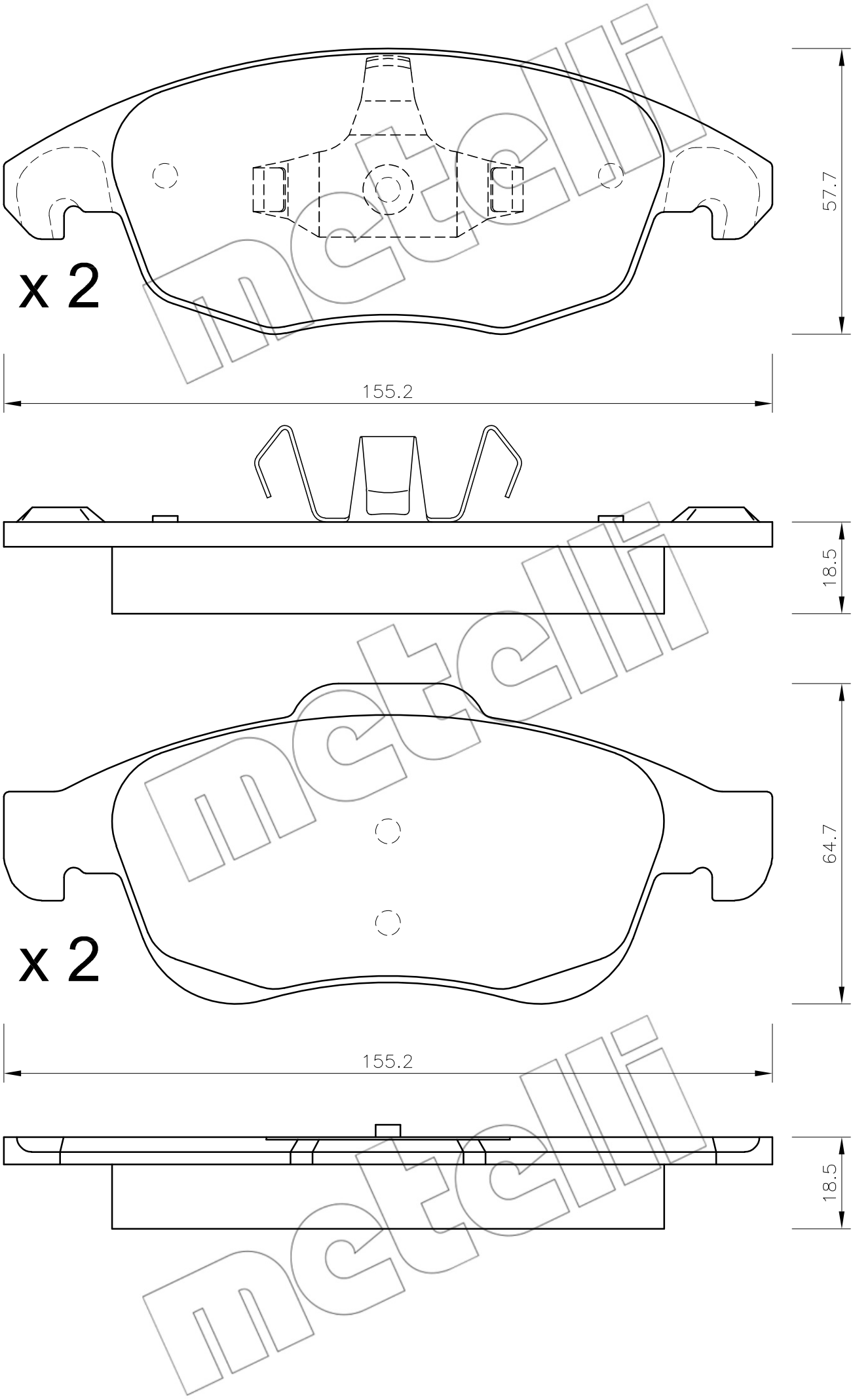
x 2
57.7
155.2
18.5
x 2
64.7
155.2
18.5
metelli
metelli
metelli