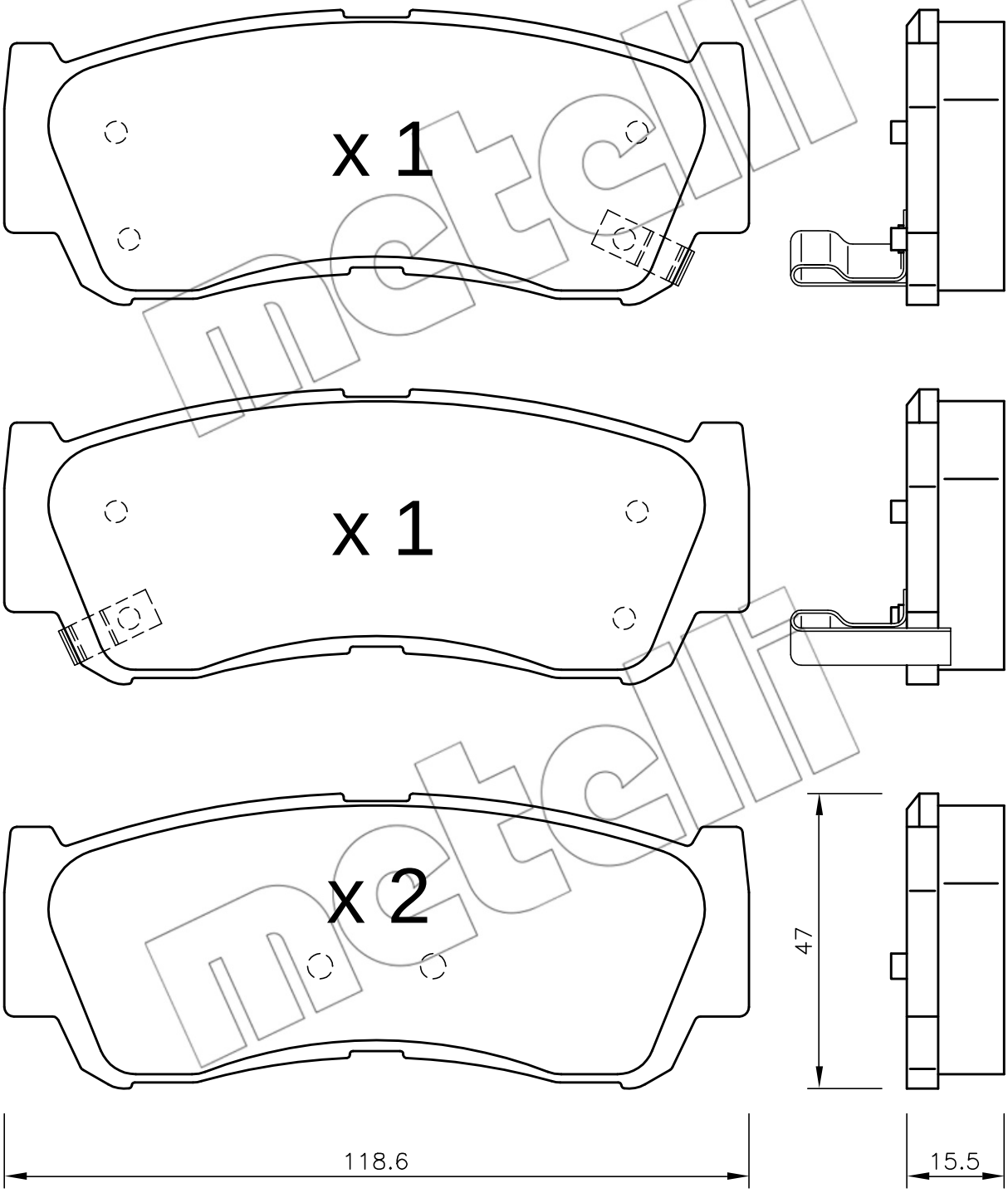
x 1
x 1
x 2
47
118.6
15.5