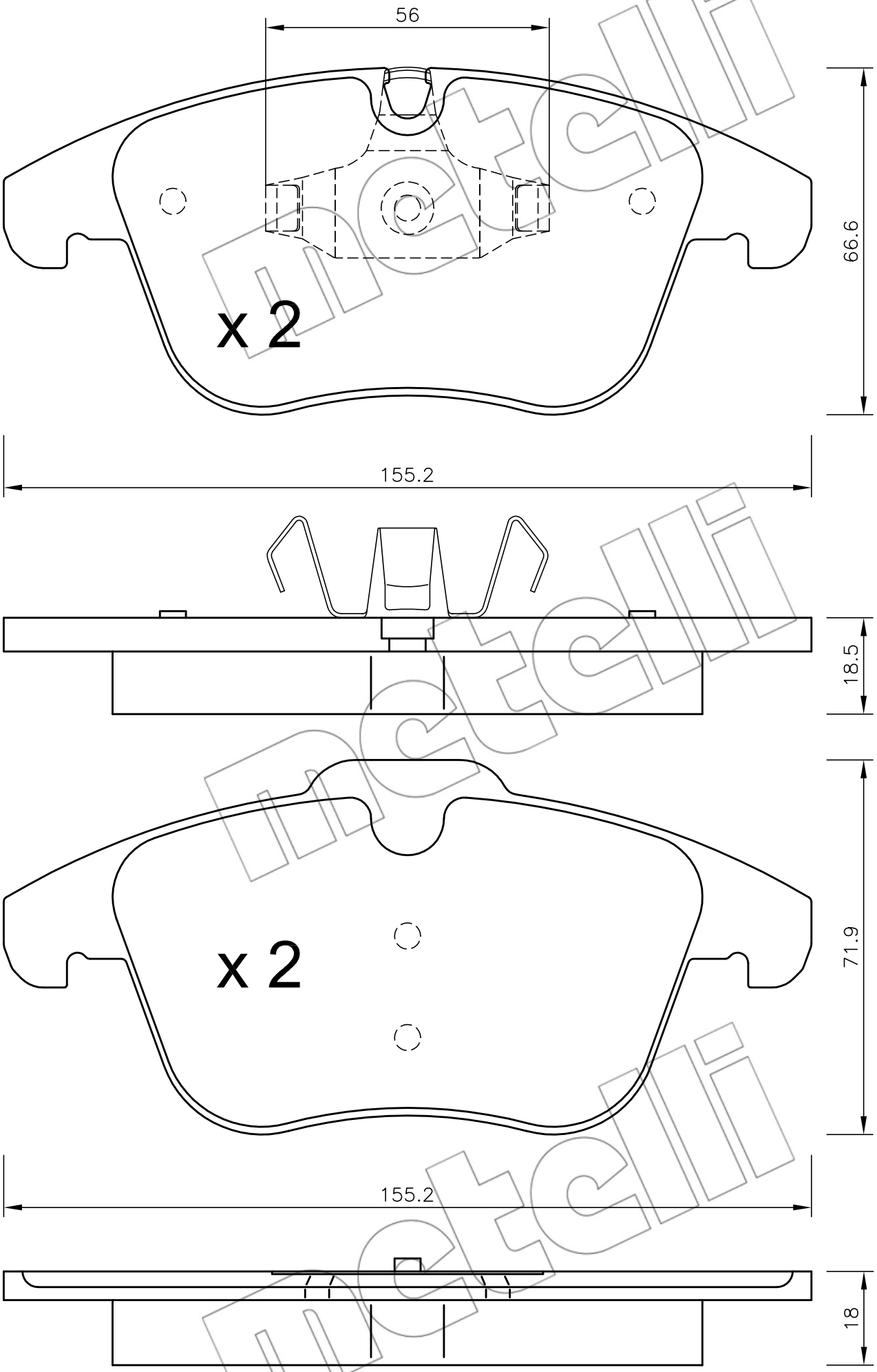
56
66.6
x 2
155.2
18.5
71.9
x 2
155.2
18
x 2
L = 310