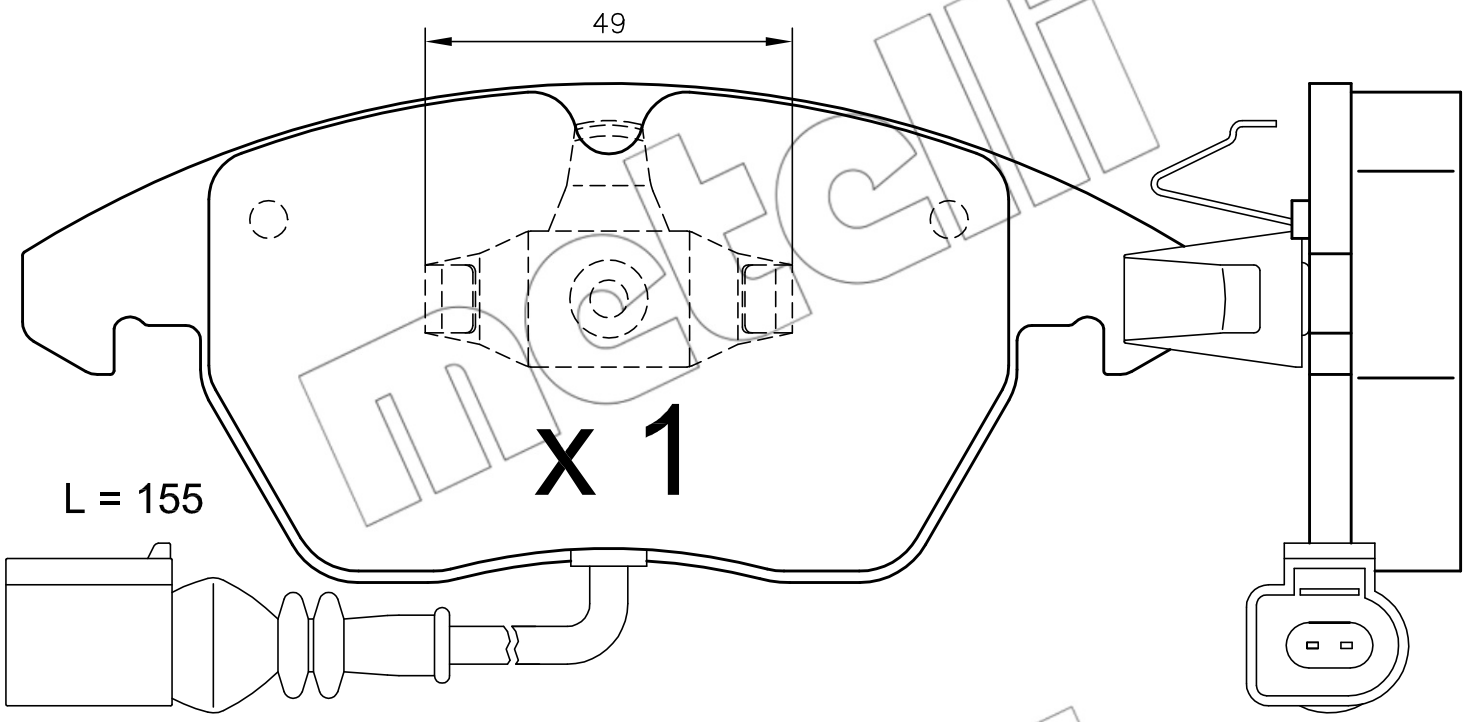
49
x 1
L = 155

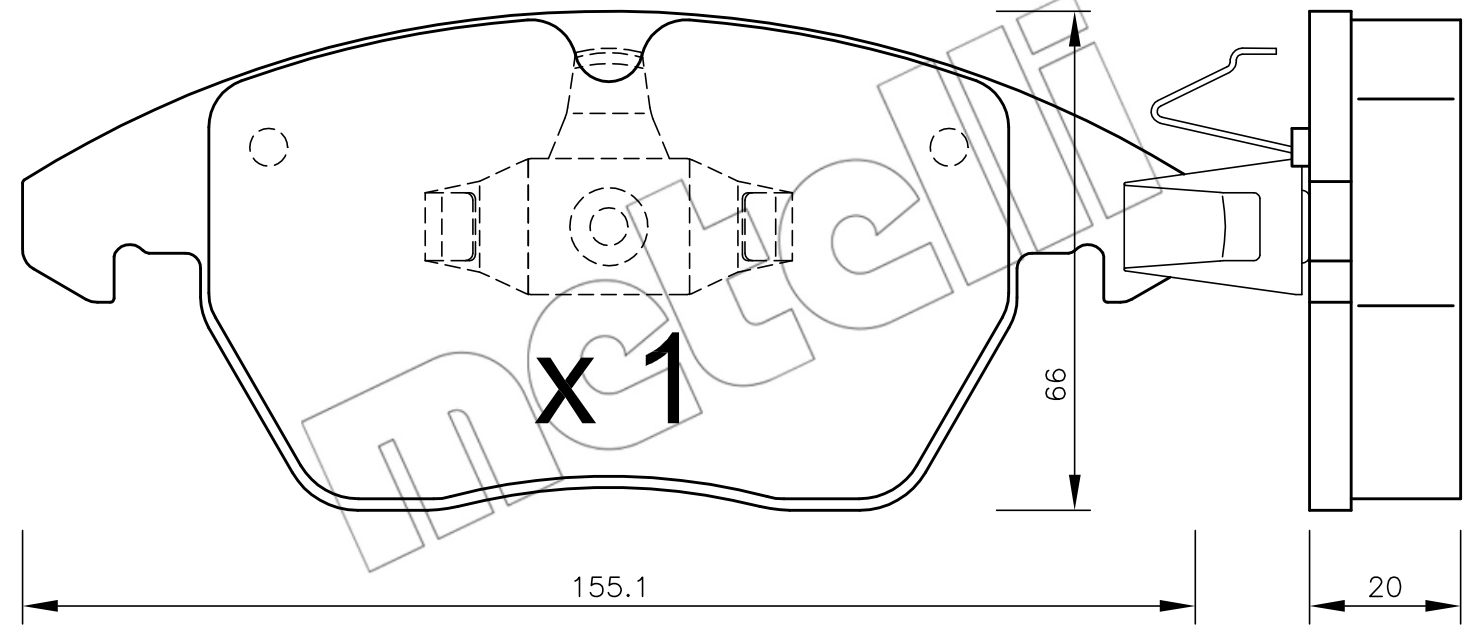
x 1
66
155.1
20

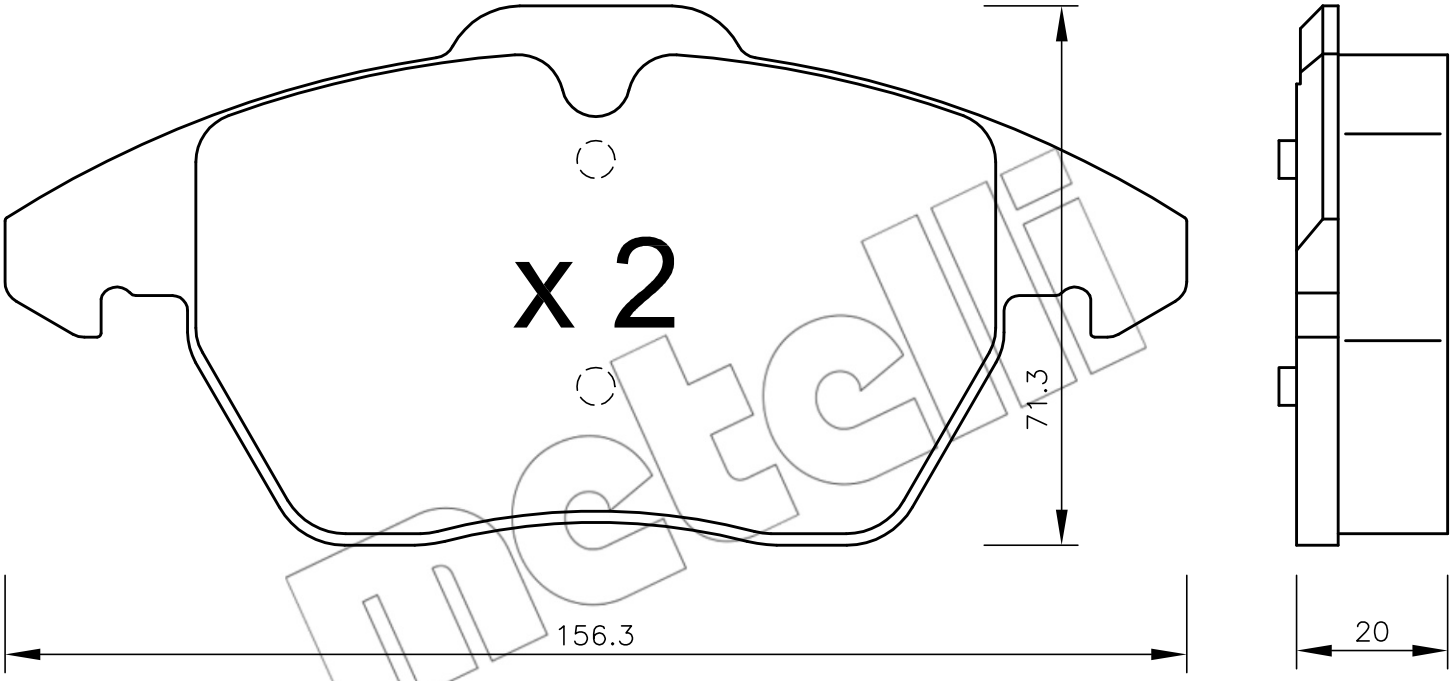
x 2
71.3
156.3
20