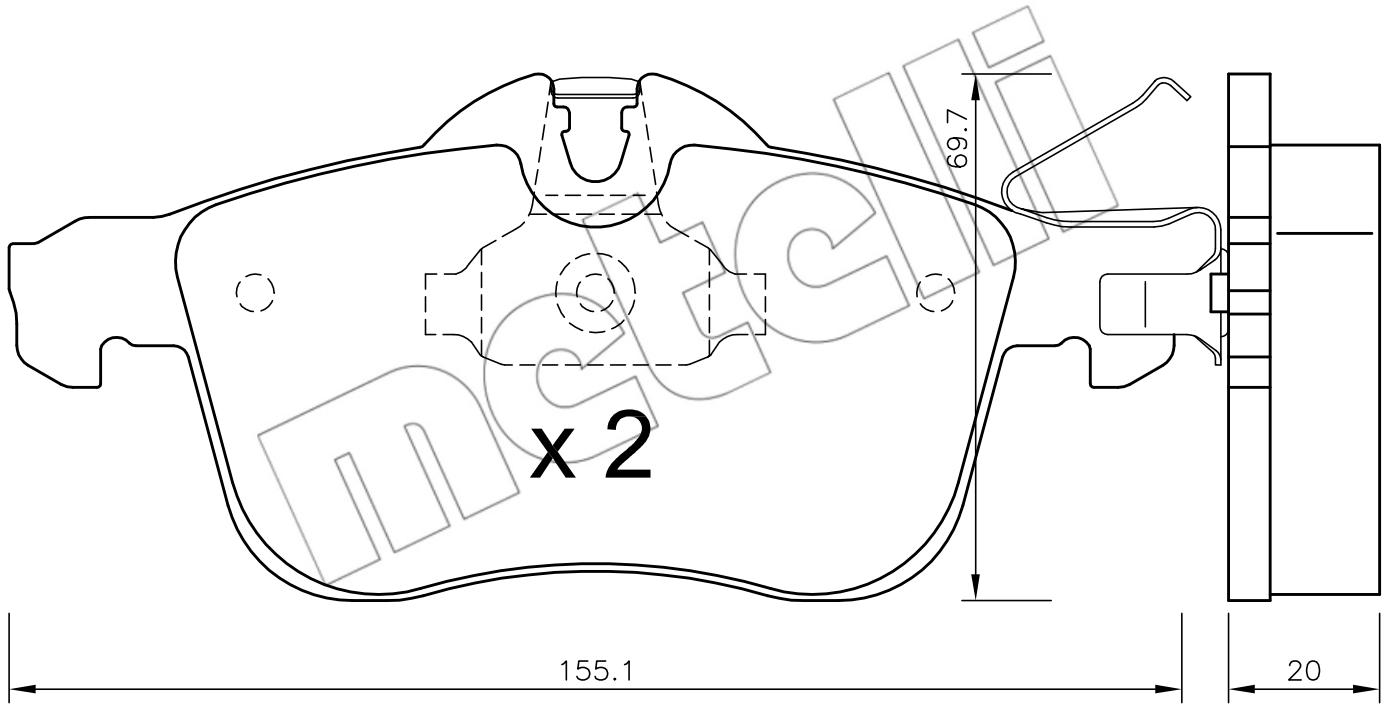
69.7
x 2
155.1
20

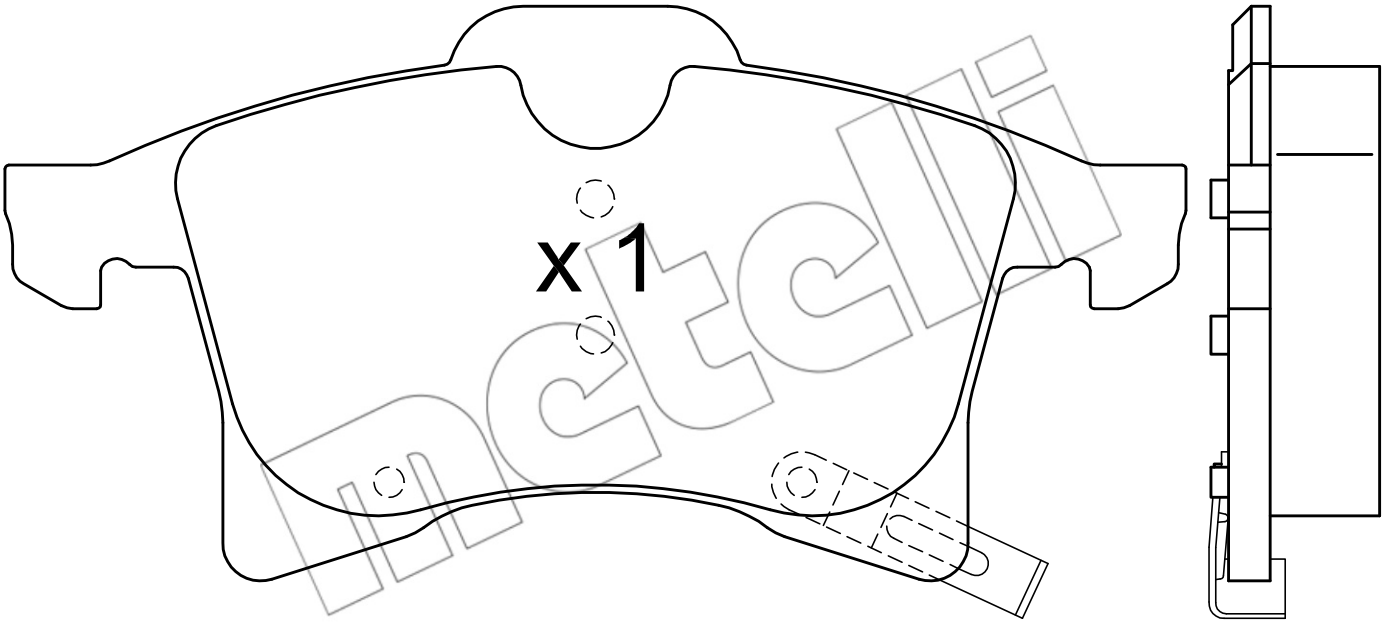
x 1

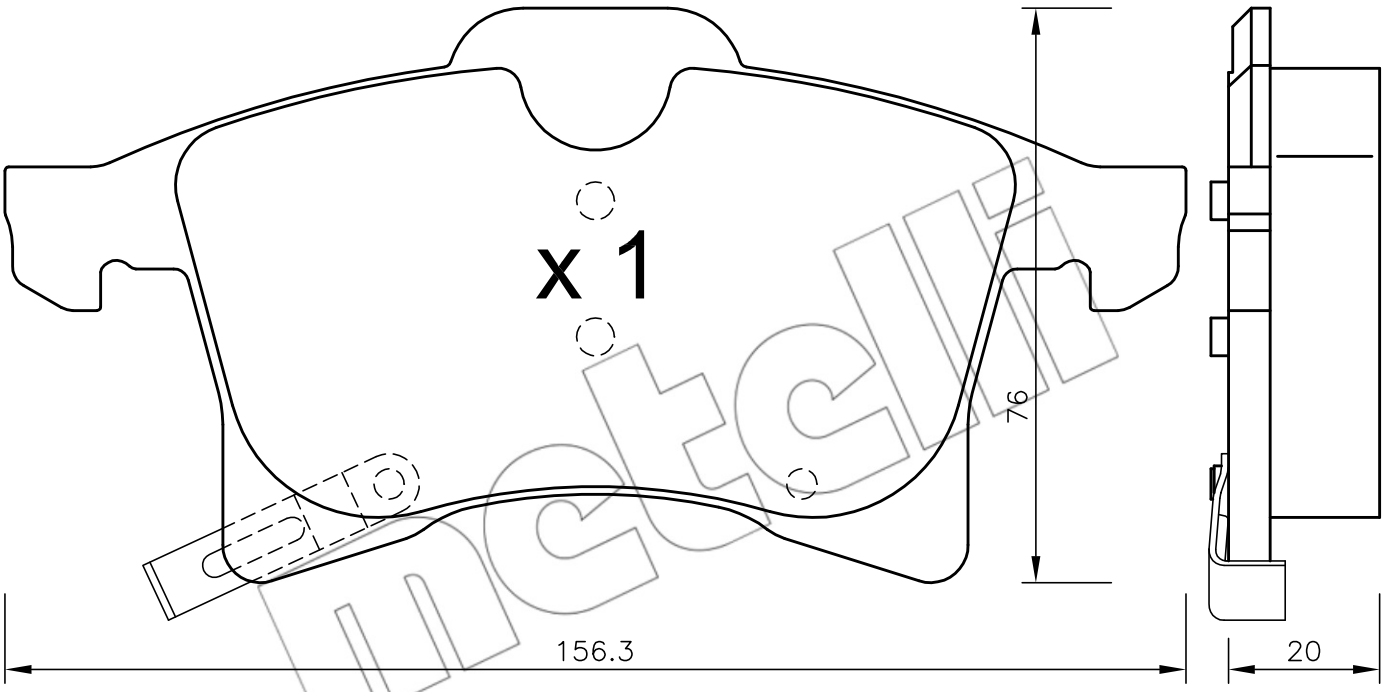
x 1
76
156.3
20