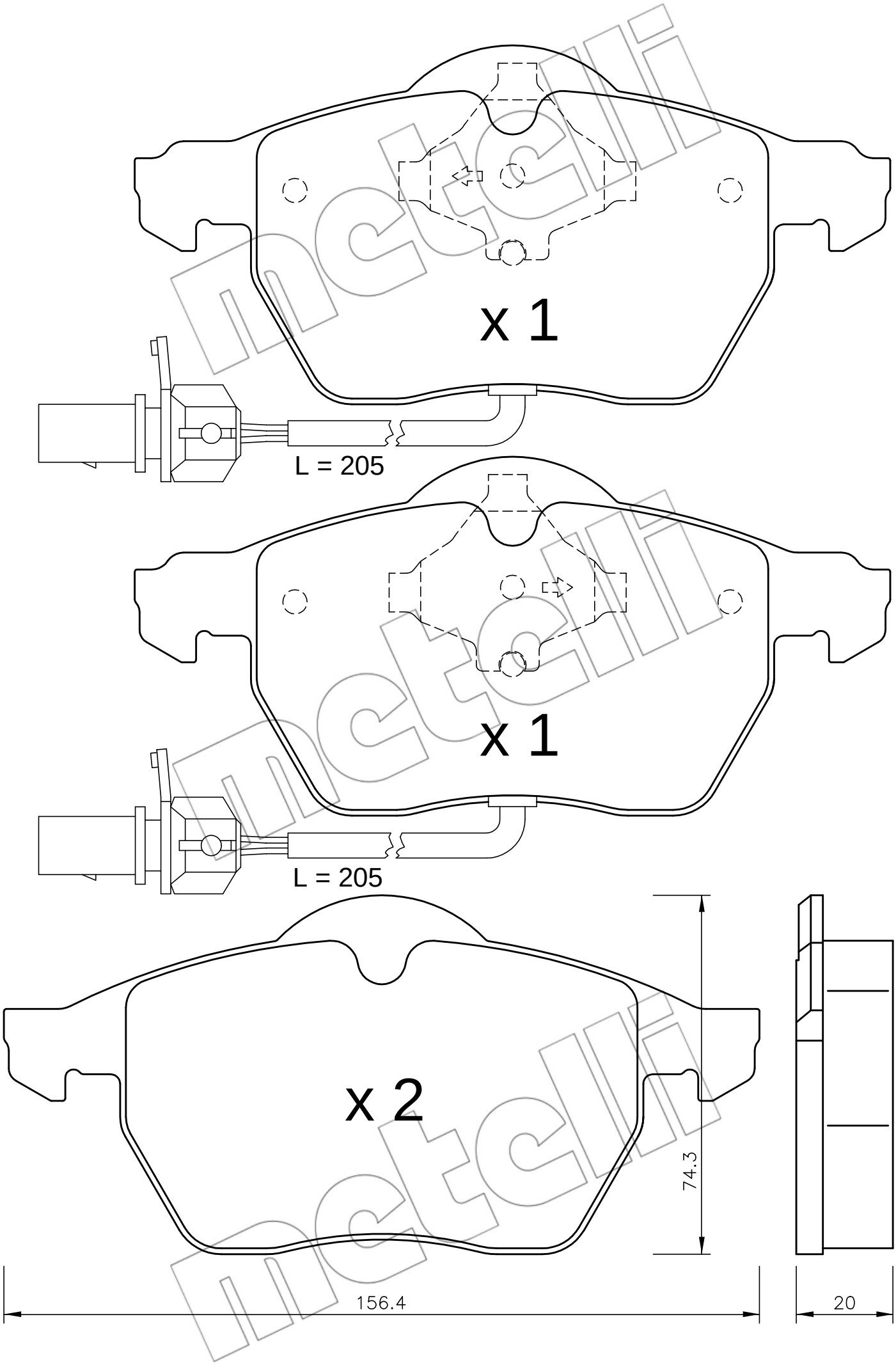
x 1
L = 205
x 1
L = 205
x 2
74.3
156.4
20