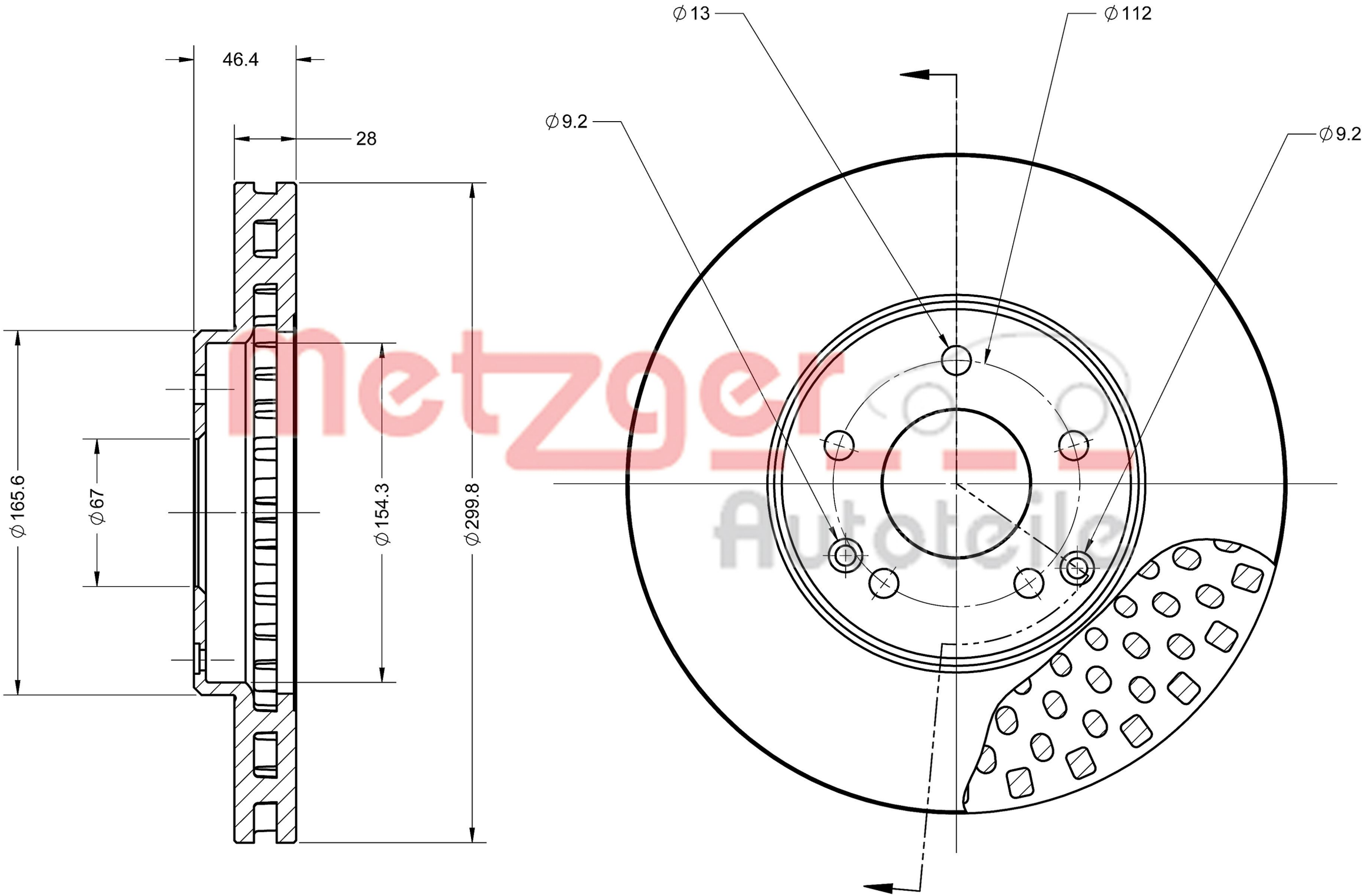
46.4
28
∅165.6
∅67
∅154.3
∅299.8
∅13
∅112
∅9.2
∅9.2