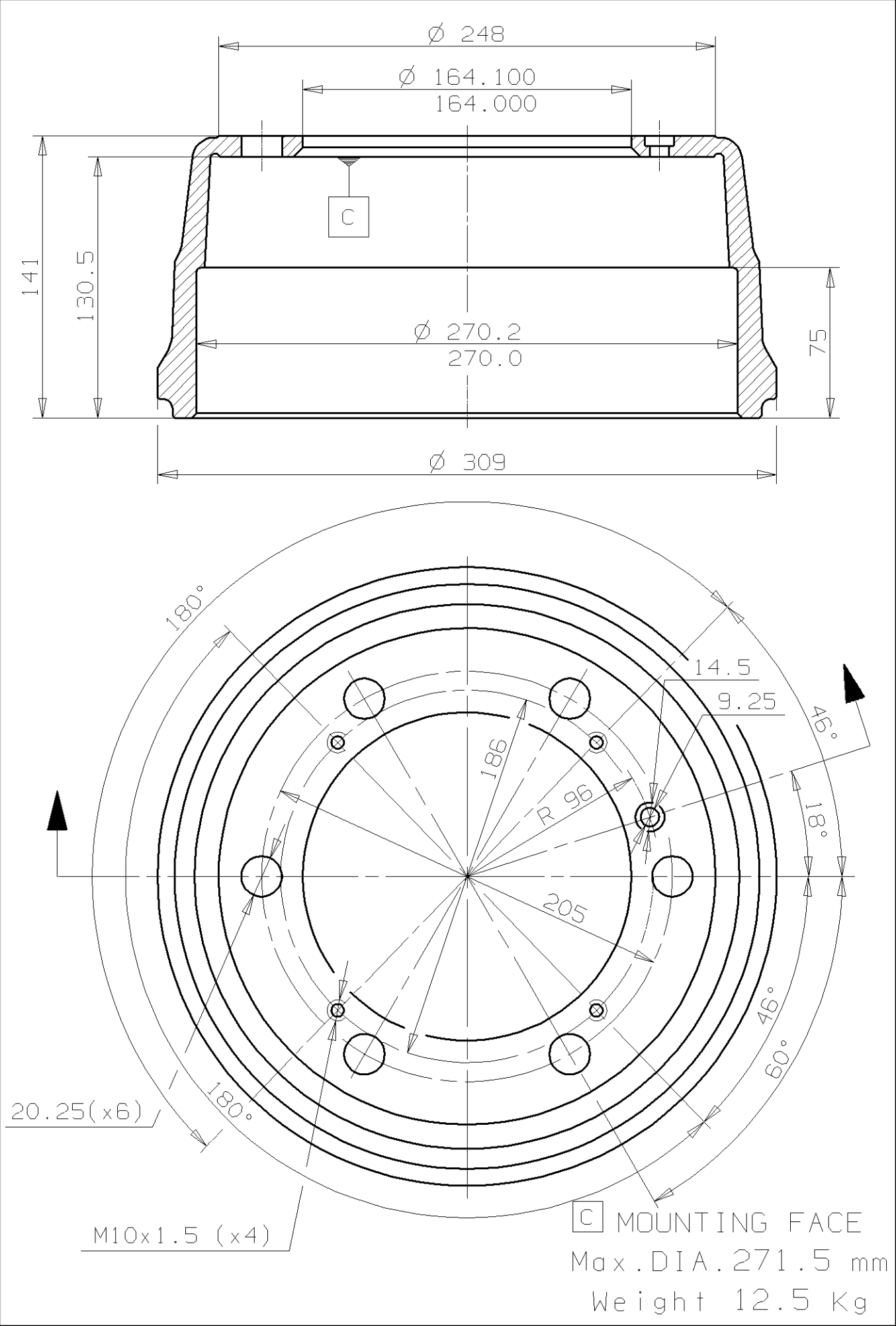
Ø 248
Ø 164.100
164.000
C
141
130.5
Ø 270.2
270.0
75
Ø 309
180°
14.5
9.25
46°
186
R 96
18°
205
46°
60°
180°
20.25(x6)
M10x1.5 (x4)
C MOUNTING FACE
Max.DIA.271.5 mm
Weight 12.5 Kg