T 0232

MONROE®

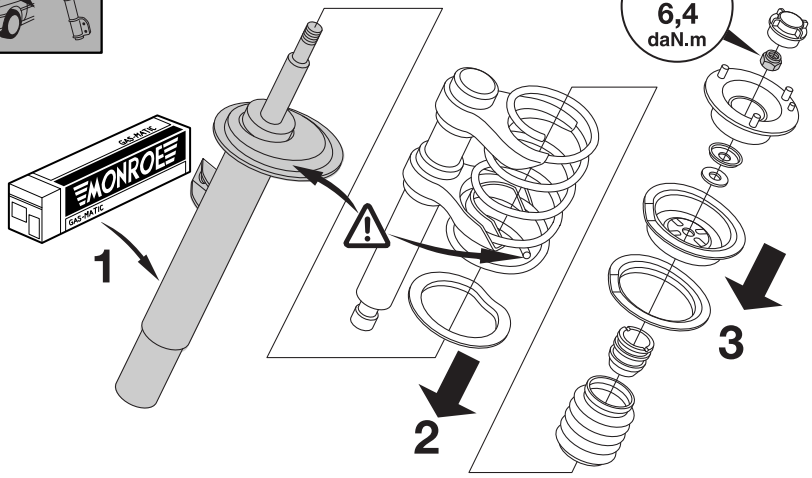

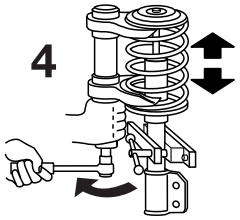

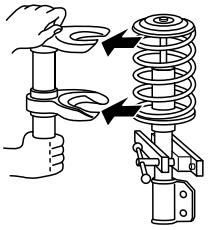

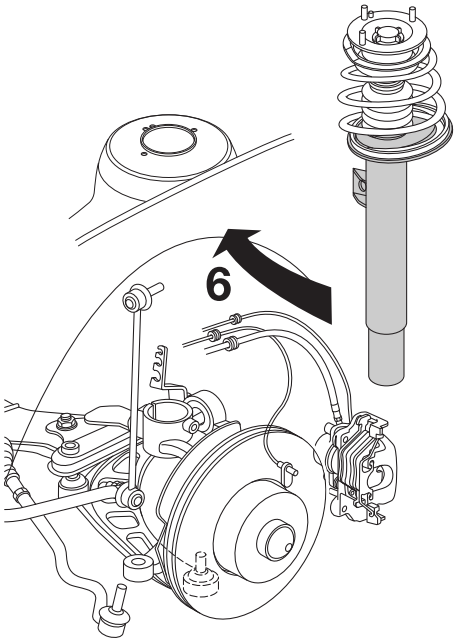

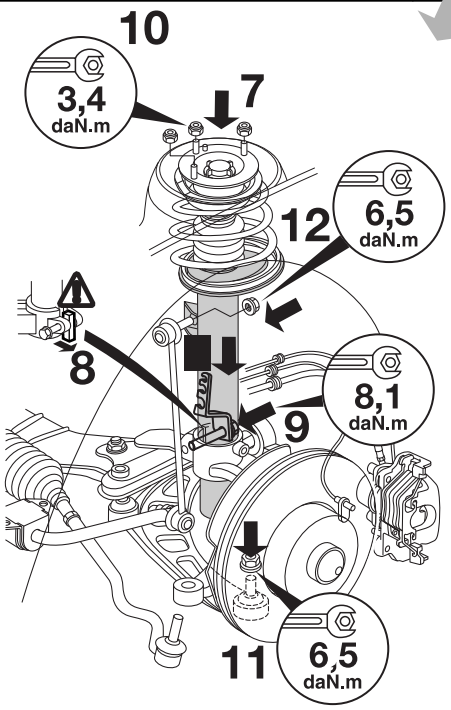

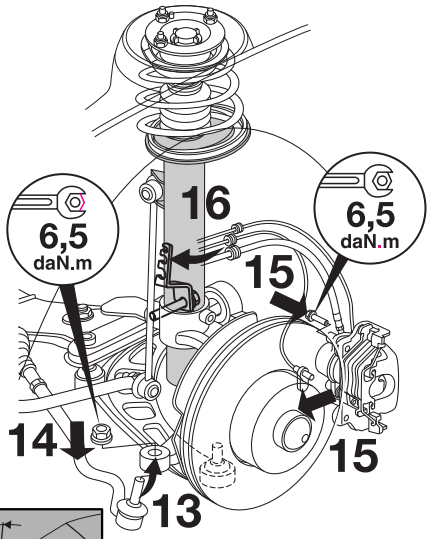

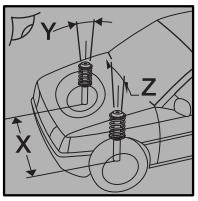

17

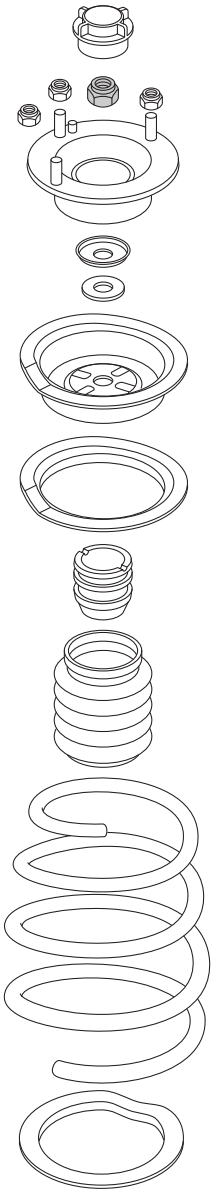

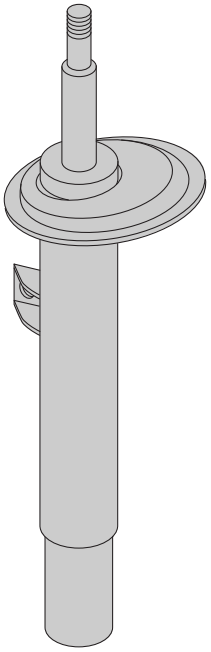

© Monroe all rights reserved.