SCHAEFFLER REP>XPERT

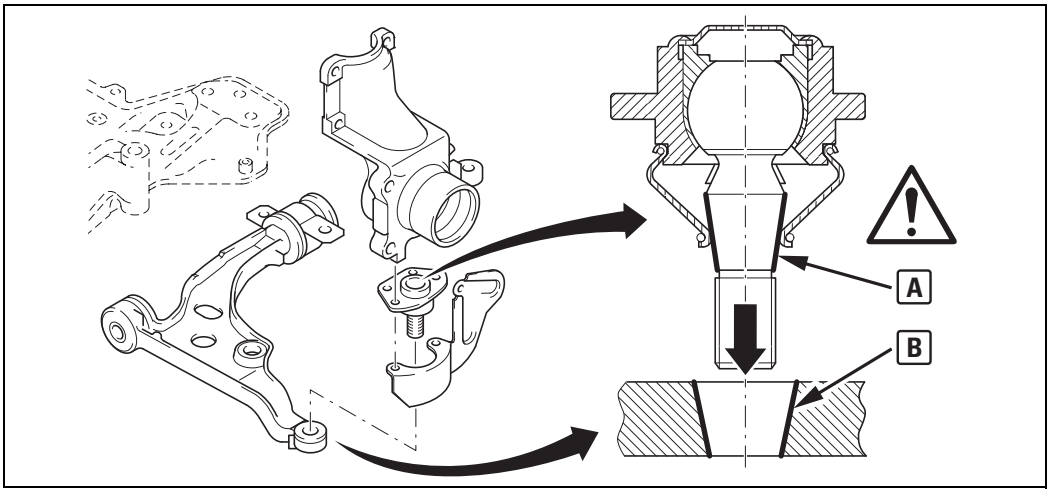

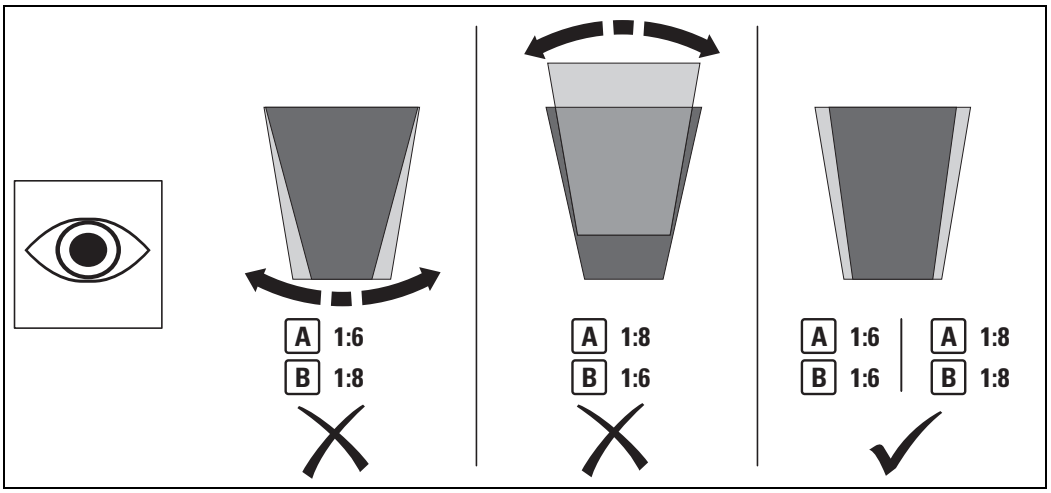

999 6010 190 © 2017 Schaeffler Automotive Aftermarket